INDEX OF SHEETS

SHEET NO.	DESCRIPTION
1	COVER
2	TRAFFIC CONTROL & REMOVAL PLAN
3	COMPOSITE UTILITY PLAN
4	CONSTRUCTION PLAN
4A	STREET DETAILS
5	STORM, WATER & SANITARY PLAN
6	STREET CENTERLINE & UTILITIES PROFILE
7	LEFT & RIGHT GUTTER PROFILE
8	POWER & LIGHTING PLAN
8A	POWER & LIGHTING PLAN
9	POWER & LIGHTING DETAILS
10	POWER & LIGHTING DETAILS
11	POWER & LIGHTING DETAILS
11A	POWER & LIGHTING DETAILS
12	RETAINING WALL PLAN, PROFILE AND SECTION
12A	RETAINING WALL RAIL DETAILS
13	PRIVATE UTILITIES PLAN
14	STREET SIGNAGE, STRIPING, & CONCRETE SCORING
15	WATER SYSTEM MODIFICATIONS, CASING & MISCELEANOUS DETAILS
16	WATER SYSTEM MODIFICATIONS, CASING & MISCELEANOUS DETAILS
17	TRI-MET SIGNAL ARM & BASE DETAILS
18	STORMFILTER CATCH BASIN DETAILS
19	IRRIGATION & LANDSCAPE PLAN
20	LANDSCAPE DETAILS
21	CONSTRUCTION DETAILS
22	CONSTRUCTION DETAILS
23	CONSTRUCTION DETAILS
24	CONSTRUCTION DETAILS
25	EROSION CONTROL PLAN
26	EROSION CONTROL DETAILS
27	POTHOLE DATA
28	PIPE DATA SHEET

RD400 GUARDRAILS AND METAL MEDIAN BARRIERS
RD405 GUARDRAIL AND METAL MEDIAN BARRIER PARTS
RD415 GUARDRAIL AND METAL MEDIAN BARRIER PARTS
RD445 GUARDRAIL INSTALLATION AT R.R. GRADE CROSSING

STATE OF OREGON
DEPARTMENT OF TRANSPORTATION

PLANS FOR PROPOSED PROJECT

GRADING, DRAINAGE, STRUCTURES, PAVING AND SIGNING

SW ROSE BIGGI AVENUE: SW MILLIKAN TO SW CRESCENT ROSE BIGGI AVENUE

WASHINGTON COUNTY
JULY 2006

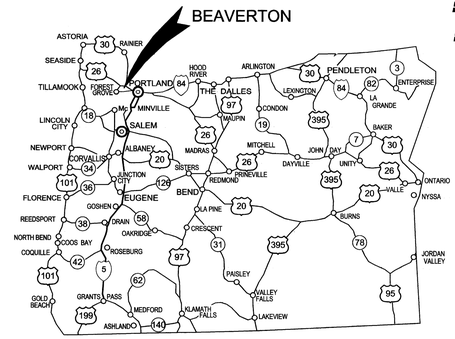

ATTENTION:
Oregon Law Requires You To Follow Rules Adopted By The Oregon Utility Notification Center. Those Rules Are Set Forth In OAR 952-001-0010 Through OAR 952-001-0090. You May Obtain Copies Of The Rules By Calling The Center. (Note: The Telephone Number For The Oregon Utility Center Is (503) 232-1987.)

Safety First
LET'S ALL WORK TOGETHER TO MAKE THIS JOB SAFE

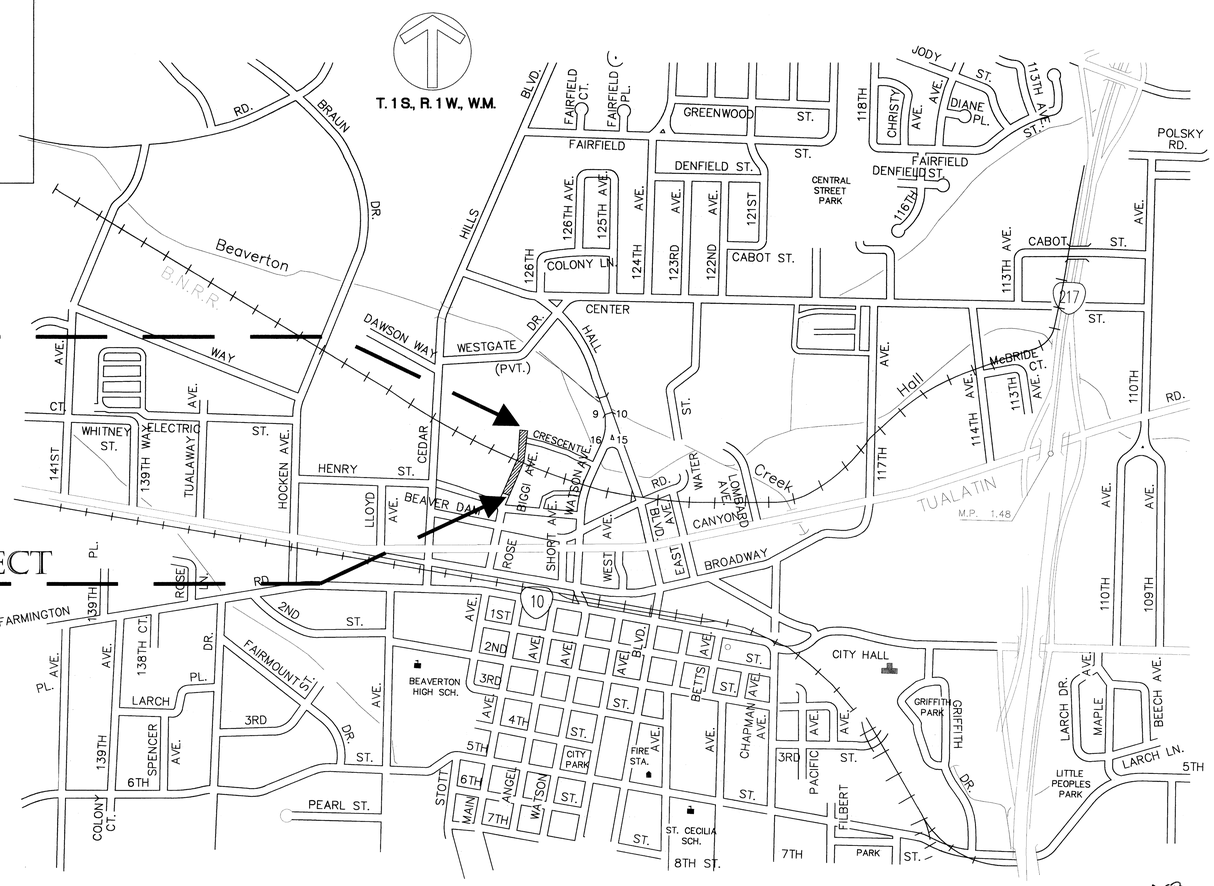

1 REVISED JULY 6, 2006

AS-BUILT: CGOH 09-11-07

DRAFTED BY:	CG	DESIGNED BY:	JEB	REVIEWED BY:	TLW

OREGON TRANSPORTATION COMMISSION

Stuart Foster	CHAIRMAN
Gail L. Achteman	COMMISSIONER
Mike Nelson	COMMISSIONER
Randall Pape	COMMISSIONER
Janice J. Wilson	COMMISSIONER
Mathew L. Garrett	DIRECTOR OF TRANSPORTATION

PLANS PREPARED BY:
CITY OF BEAVERTON
PO BOX 4755
BEAVERTON, OR 97076

REGISTERED PROFESSIONAL ENGINEER 15860PE OREGON APRIL 1, 1981 JAMES E. BRINK
EXPIRES: 12-31-07

OREGON DEPARTMENT OF TRANSPORTATION CONCURRENCE

TECHNICAL SERVICES MANAGING ENGINEER — DATE

SW ROSE BIGGI AVENUE (SW MILLIKAN TO SW CRESCENT)
WASHINGTON COUNTY

FEDERAL HIGHWAY ADMINISTRATION	PROJECT NUMBER	SHEET NO.
OREGON DIVISION	X-STP-0535(020)	1

MAP RECORD | AB #18119_1810
Project: CIP 3314 | QS: 3516
Date: 09/11/2007

Rose Biggi (Millikan-Crescent) | Street Imp.

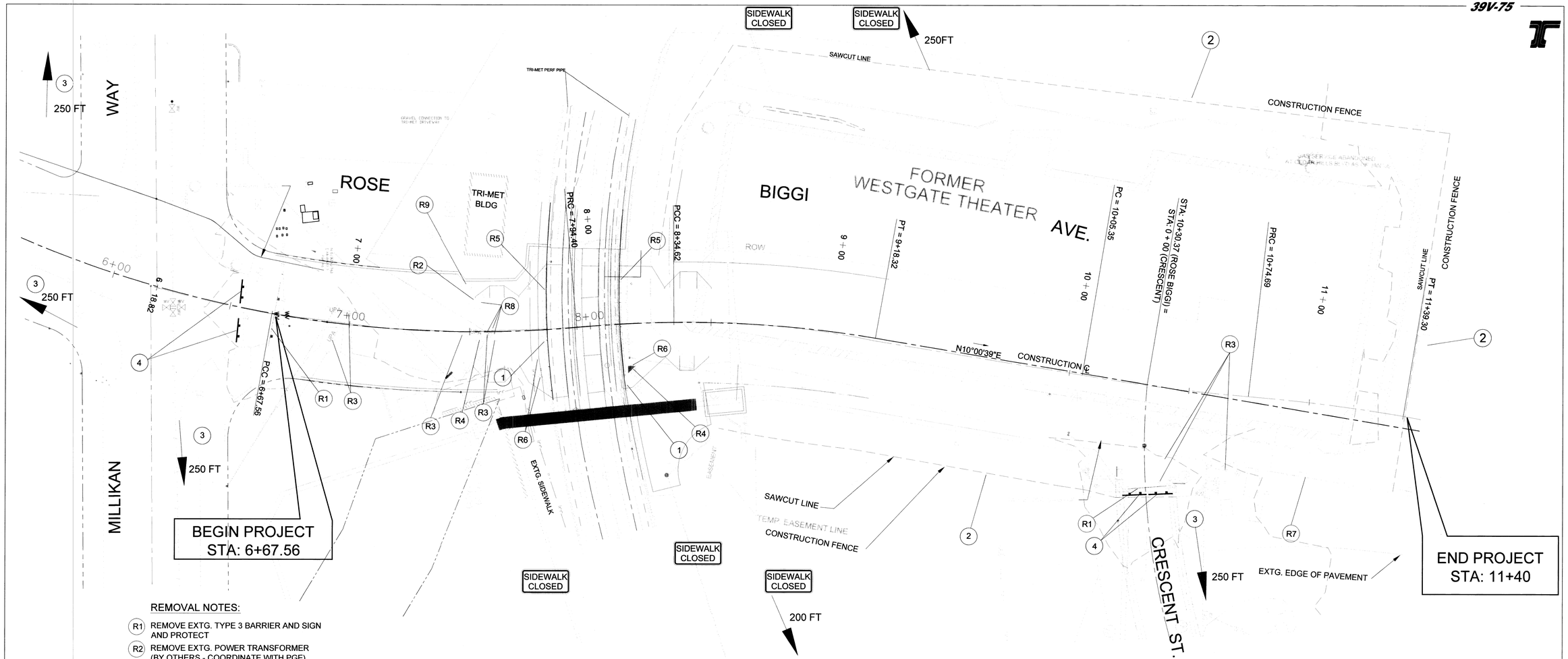

REMOVAL NOTES:

- (R1) REMOVE EXTG. TYPE 3 BARRIER AND SIGN AND PROTECT
- (R2) REMOVE EXTG. POWER TRANSFORMER (BY OTHERS - COORDINATE WITH PGE)
- (R3) REMOVE EXTG. UTILITY POLE AND GUY WIRES AND ELECTRICAL METER (BY OTHERS - COORDINATE WITH PGE, TRI-MET)
- (R4) REMOVE TELEPHONE PEDESTAL (BY OTHERS - COORDINATE WITH VERIZON)
- (R5) REMOVE 49 LF OF 4' CHAINLINK FENCE, TOP 12" OF 133 LF OF CONCRETE BALLAST WALL (SEE SHT. 4A), 14 BOLLARDS, AND WIRE ROPE BETWEEN BOLLARDS. PROTECT BOLLARDS AND WIRE ROPE UNTIL RETRIEVED BY TRI-MET. COORDINATE WITH TRI-MET. SAW CUT CONC. BALLAST WALL.
- (R6) REMOVE 2 POLES & LUMINAIRES AND 1 JBOX. PROTECT UNTIL TRI-MET RETRIEVES (COORDINATE WITH TRI-MET).
- (R7) REMOVE 99 LF OF 6' CHAINLINK FENCE.
- (R8) REMOVE CONCRETE TRANSFORMER PAD AND ELECTRICAL DISCONNECT, JBOXES, CONDUIT, WIRE AND HARDWARE NOT REMOVED BY PGE OR TRI-MET. ALL EXTG MATERIALS NOT REQUIRED FOR FUTURE USE SHALL BE REMOVED IN THEIR ENTIRETY. COORDINATE MATERIALS TO BE REMOVED WITH CITY PROJECT ENGINEER.
- (R9) REMOVE IRR. CONTROLLER PAD AND HARDWARE.

GENERAL NOTES:

1. INSTALL 141 LF OF TEMPORARY 4' HIGH ORANGE PLASTIC "SNOW" FENCE ON BOTH SIDES OF THE TRACKS. FENCE MUST BE INSTALLED WHENEVER FLAGGERS ARE NOT PRESENT.
2. INSTALL 953 LF OF 6' TEMPORARY CONSTRUCTION FENCE.
3. INSTALL FOUR (4) "ROAD WORK AHEAD" SIGNS (W20-1, 48"x48").
4. INSTALL 4 - 10' TYPE 3 BARRICADES
5. INSTALL 5 - TYPE 1 BARRICADES WITH "SIDEWALK CLOSED" SIGNS (R9-9, 24"x12")
6. INSTALL EROSION CONTROL MEASURES (SEE SHT 25) BEFORE BEGINNING REMOVAL WORK OR ANY OTHER CONSTRUCTION WORK.

N

0 20 40 80

TRAFFIC CONTROL & REMOVAL PLAN

REGISTERED PROFESSIONAL ENGINEER 15860PE OREGON APRIL 1, 1994 JAMES E. BRINK

EXPIRES: 12-31-07

AS-BUILT: CGOH 09-11-07 JEB

DRAFTED BY:	CG	DESIGNED BY:	JEB	REVIEWED BY:	TLW

SW ROSE BIGGI (SW MILLIKAN-SW CRESCENT)

WASHINGTON COUNTY

FEDERAL HIGHWAY ADMINISTRATION		PROJECT NUMBER	SHEET NO.
REGION 1	OREGON DIVISION	OREGON MAP RECORD | AB #18119_1810	2

Project: CIP 3314 | QS: 3516

Date: 09/11/2007

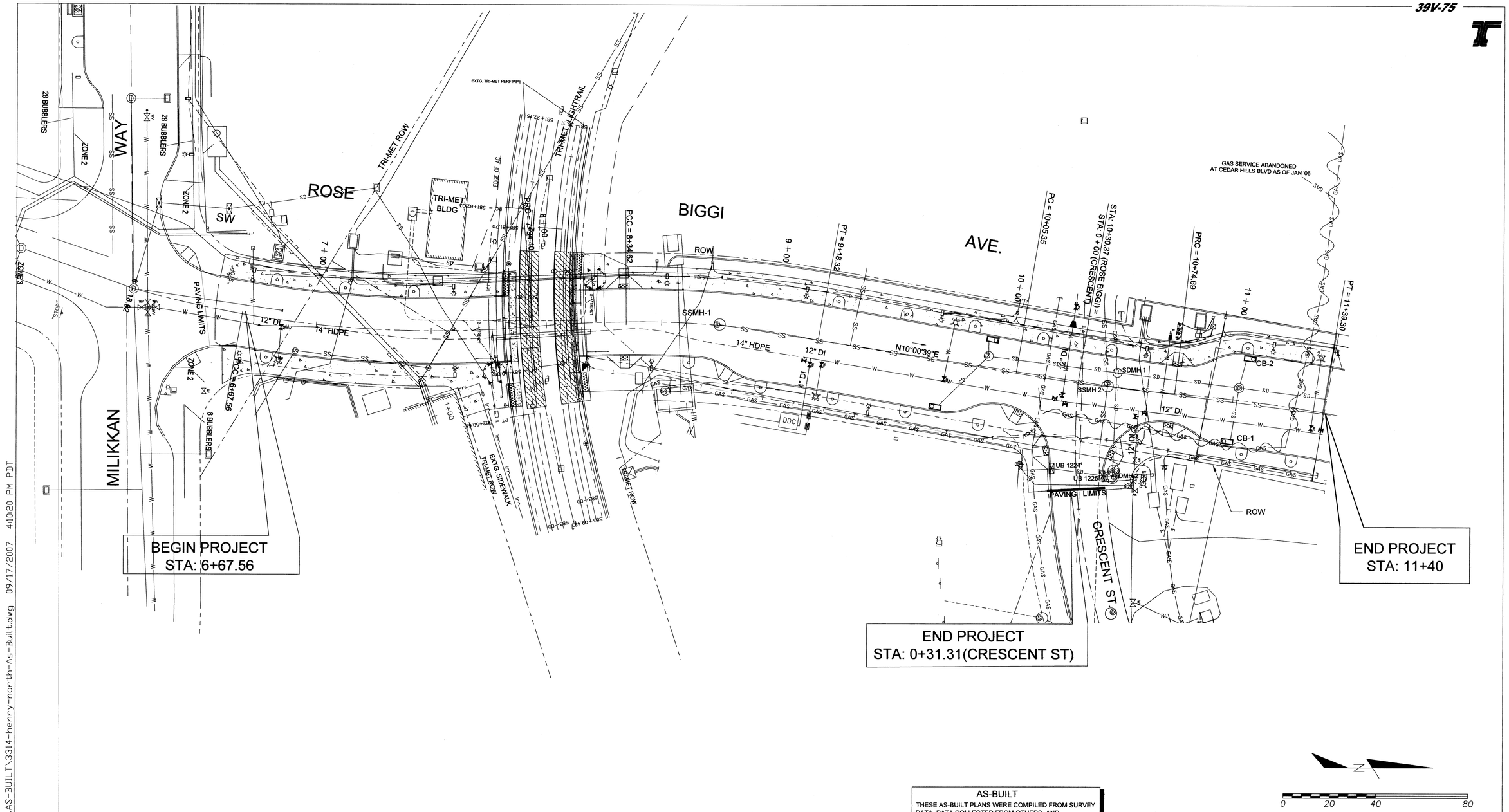

Y:\Sdsk\3314-Henry-North\AS-BUILT\3314-henry-north-As-Built.dwg 09/17/2007 4:10:20 PM PDT

AS-BUILT

THESE AS-BUILT PLANS WERE COMPILED FROM SURVEY DATA, DATA COLLECTED FROM OTHERS, AND OBSERVATION DURING CONSTRUCTION. IT IS SUGGESTED THAT THESE PLANS BE USED IN CONJUNCTION WITH FIELD VERIFICATION OF LOCATION AND ELEVATION OF IMPROVEMENTS IN QUESTION. THE CITY OF BEAVERTON ASSUMES NO RESPONSIBILITY, OR LIABILITY, FOR ANY ERRORS, OMISSIONS, OR USE OF THIS INFORMATION.

SIGNATURE James E. Brink

DATE 9-11-2007

AS-BUILT: CGCH & JEB 09-11-07 JEB

DRAFTED BY:	CG	DESIGNED BY:	JEB	REVIEWED BY:	TLW

REGISTERED PROFESSIONAL ENGINEER 15860PE OREGON APRIL 1, 1991 JAMES E. BRINK

EXPIRES: 12-31-07

SW ROSE BIGGI (SW MILLIKAN-SW CRESCENT)

WASHINGTON COUNTY

FEDERAL HIGHWAY ADMINISTRATION		PROJECT NUMBER	SHEET NO.
REGION 1	OREGON DIVISION	OREGON MAP RECORD | AB #18120 1810	3

Project: CIP 3314 | QS: 3516

Date: 09/11/2007

Rose Biggi (Millikan-Crescent) | Street Imp.

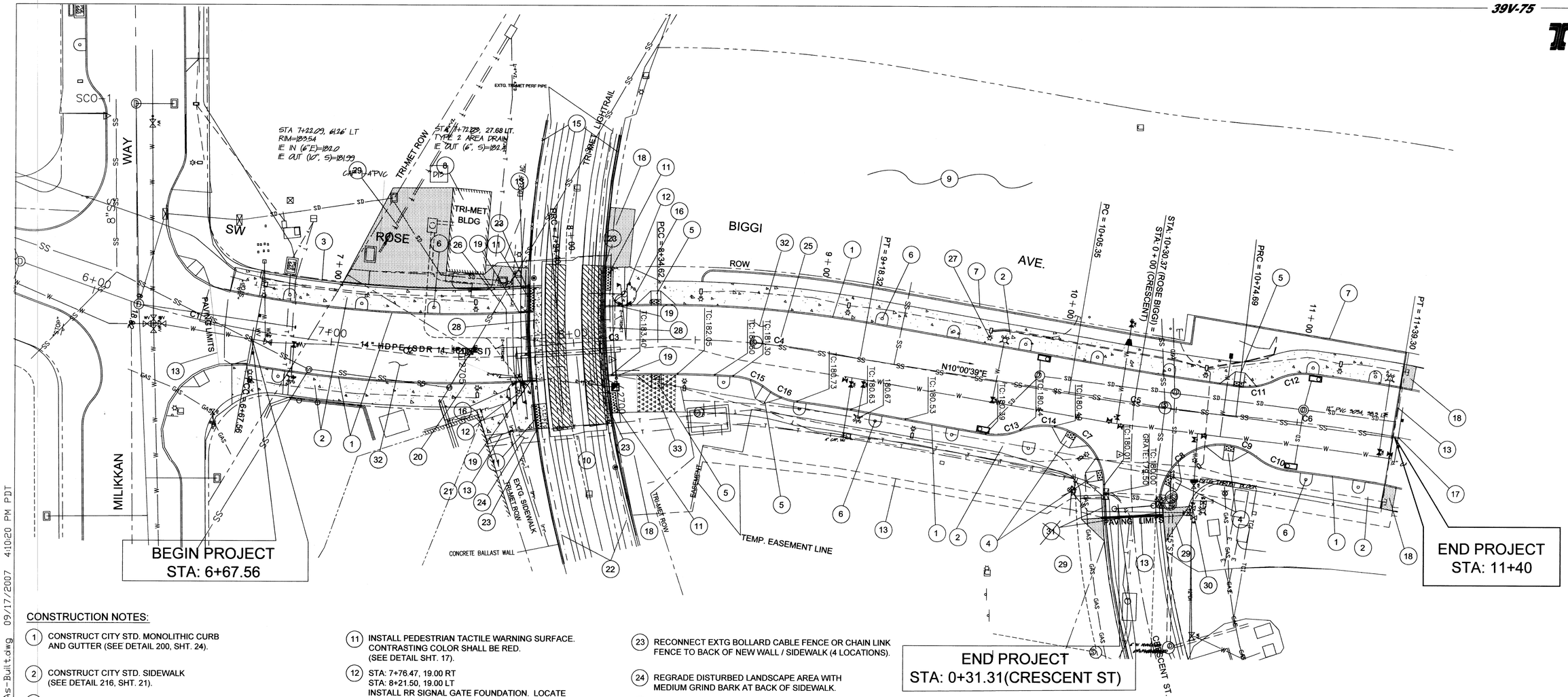

CONSTRUCTION NOTES:

1. CONSTRUCT CITY STD. MONOLITHIC CURB AND GUTTER (SEE DETAIL 200, SHT. 24).
2. CONSTRUCT CITY STD. SIDEWALK (SEE DETAIL 216, SHT. 21).
3. CONSTRUCT WALL AND HANDRAIL MATCH COLOR OF EXTG. HANDRAIL AT STA 7+00, 25'R SEE WALL DWG. & PROFILE SHT. 12 & 12A.
4. CONSTRUCT CITY STD. ADA RAMP W/ RED TRUNCATED DOME (SEE DETAIL 221, SHT.24).
5. CONSTRUCT CITY STD. MIDBLOCK ADA RAMP W/ RED TRUNCATED DOME (SEE DETAIL 225, SHT.24).
6. CONSTRUCT TREE WELL - 18 EACH SEE DETAILS SHT 14, 19, & 20
7. CONSTRUCT TYPE "A" CURB - 4.50' RADIUS INSTALL WEEPHOLES EVERY 25' (SEE DETAIL 203, SHT. 24).
8. MAINTAIN ACCESS TO TRI-MET SIGNAL BUILDING AT ALL TIMES
9. CONSTRUCTION STAGING AREA
10. BORE 1 - 24" STEEL CASING UNDER TRI-MET RAILROAD (SEE PROFILE SHT.6 AND CASING DETAILS SHT. 15 & 16).
11. INSTALL PEDESTRIAN TACTILE WARNING SURFACE. CONTRASTING COLOR SHALL BE RED. (SEE DETAIL SHT. 17).
12. STA: 7+76.47, 19.00 RT
    STA: 8+21.50, 19.00 LT
    INSTALL RR SIGNAL GATE FOUNDATION. LOCATE EXTG 4" PVC CONDUIT AND EXTEND CONDUIT TO FOUNDATION (SEE DETAILS SHT. 17).
13. SAWCUT - 630 L.F.
14. INSTALL ASPHALT SIDEWALK SECTION AT 1:1 SLOPE (SEE SHT. 4A).
15. PROTECT GROUND WIRE ALONG OUTSIDE OF CONCRETE BALLAST WALL, APRROX 2'-8" DEEP.
16. INSTALL GUARDRAIL (SEE SHT. 24).
17. INSTALL TYPE 3 BARRICADE (SEE SHT 2, NOTE R1) WITH FUTURE STREET EXTENSION SIGN (SEE DETAIL SHT. 22). AT LOCATION DIRECTED BY ENGINEER
18. INSTALL ASPHALT SIDEWALK SECTION, 63 SY (SEE DETAIL SHT. 4A).
19. TAPER FULL CURB EXPOSURE TO ZERO AT TRI-MET CROSSING. TAPER LENGTH IS 6 FT FROM EDGE OF CONCRETE TRANSITION.
20. STA: 7+55.35, 14.50 RT
    BEGIN REVERSE SIDEWALK SLOPE TO MATCH SIDEWALK AT TRI-MET CROSSING AND SOUTH OFFICE BLDG.
21. REMOVE EXTG CONCRETE SIDEWALK TO NEAREST JOINT. PROTECT BLDG.
22. PROTECT EXTG TRI-MET PERF. PIPE APPROX. 3' DEEP.
23. RECONNECT EXTG BOLLARD CABLE FENCE OR CHAIN LINK FENCE TO BACK OF NEW WALL / SIDEWALK (4 LOCATIONS).
24. REGRADE DISTURBED LANDSCAPE AREA WITH MEDIUM GRIND BARK AT BACK OF SIDEWALK.
25. CURVE DATA, SEE SHT 4A
26. STA: 7+70.87
    BEGIN SIDEWALK TAPER TO MATCH TRI-MET CONCRETE CROSSING GRADE.
27. INSTALL STREET LIGHT (SEE DETAIL SHT. 8 & 9).
28. CONSTRUCT CONCRETE TRANSITION PANEL ALONG TRACK CROSSING (SEE DETAIL SHT 4A).
29. INSTALL PARKING LOT SECTION, 428 SY (SEE DETAIL SHT. 4A).
30. LOCATE BACK OF SIDEWALK 2" FROM WATER VALVE BOX.
31. ~~INSTALL TRANSITION FROM FULL CURB & GUTTER TO MOUNTABLE CURB & GUTTER, APPROX 16 LF.~~
32. INSTALL STREET SECTION (SEE DETAIL SHT. 4A).
33. INSTALL THICKENED (6" DEEP CONCRETE) SIDEWALK SECTION FOR VEHICLE ACCESS.

AS-BUILT

THESE AS-BUILT PLANS WERE COMPILED FROM SURVEY DATA, DATA COLLECTED FROM OTHERS, AND OBSERVATION DURING CONSTRUCTION. IT IS SUGGESTED THAT THESE PLANS BE USED IN CONJUNCTION WITH FIELD VERIFICATION OF LOCATION AND ELEVATION OF IMPROVEMENTS IN QUESTION. THE CITY OF BEAVERTON ASSUMES NO RESPONSIBILITY, OR LIABILITY, FOR ANY ERRORS, OMISSIONS, OR USE OF THIS INFORMATION.

James E. Brink
SIGNATURE
9-11-2007
DATE

AS-BUILT: CGOA & JEB 09-11-07 JEB

DRAFTED BY:	CG	DESIGNED BY:	JEB	REVIEWED BY:	TLW

REGISTERED PROFESSIONAL ENGINEER 15860PE OREGON APRIL 1, 1991 JAMES E. BRINK
EXPIRES: 12-31-07

SW ROSE BIGGI (SW MILLIKAN-SW CRESCENT)

WASHINGTON COUNTY

FEDERAL HIGHWAY ADMINISTRATION		PROJECT NUMBER	SHEET NO.
REGION 1	OREGON DIVISION	OREGON MAP RECORD | AB #18121_1810	4

Project: CIP 3314 | QS: 3516
Date: 09/11/2007

Rose Biggi (Millikan-Crescent) | Street Imp.

Y:\Sdsk\3314-Henry-North\AS-BUILT\3314-henry-north-As-Built.dwg 09/17/2007 4:10:20 PM PDT

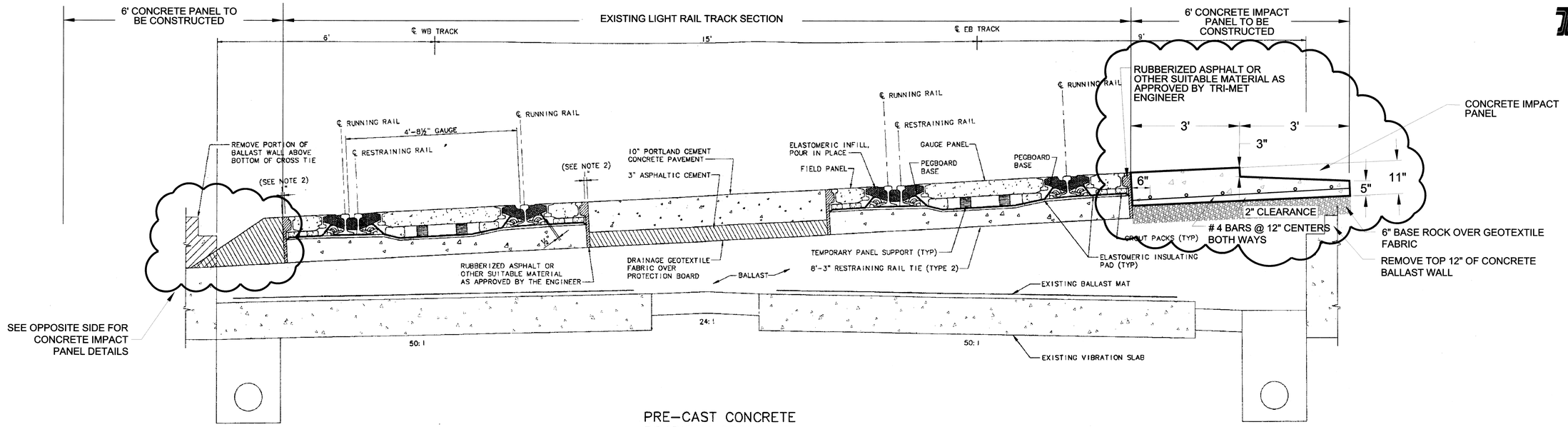

PRE-CAST CONCRETE ROADWAY CROSSING

CURVE	RADIUS	ARC LENGTH	DELTA	PC STATION	PT STATION
C1	475'	48.74'	05-52-47	6+18.82	PCC = 6+67.56
C2	475'	126.83'	15-17-56	PCC = 6+67.56	PRC = 7+94.40
C3	475'	40.22'	04-51-06	PRC = 7+94.40	PCC = 8+34.62
C4	475'	83.70'	10-05-46	PCC = 8+34.62	PT = 9+18.32
C5	750'	69.33'	05-17-48	PC= 10+05.35	PRC = 10+74.69
C6	750'	64.61'	04-56-09	PRC = 10+74.69	PT = 11+39.30
C7	25'	~~35.01'~~ 34.18'	~~90-14-30~~ 78-19-43	~~10+01.11, 14' RT~~ 10+02.05, 13.99' RT	~~0+33.21, 11.50 RT~~ 0+32.59, 11.01 RT
C8	25'	~~41.58'~~ 42.95'	~~95-18-15~~ 98-25-44	~~10+79.16, 20.90 RT~~ 10+47.93, 41.05 RT	~~10+79.00, 12.00 RT~~ 10+71.38, 12.00 RT
C9	25'	~~14.60'~~ 14.59'	~~33-20-50~~ 33-26-16	~~10+79.09, 12.00 RT~~ 10+71.38, 12.00 RT	10+84.91, 15.48 RT
C10	25'	~~12.46'~~ 13.90'	~~28-33-44~~ 31-50-55	10+84.91, 15.48 RT	~~10+97.05, 19.84 RT~~ 10+98.79, 20.00 RT
C11	25'	15.85'	36-19-15	10+74.69, 12.00 LT	10+89.47, 16.00 LT
C12	25'	14.35	32-52-59	10+89.47, 16.00 LT	11+02.73, 20.00 LT
C13	25'	14.34	32-52-52	9+74.80, 22.00 RT	9+88.37, 18.00 RT
C14	25'	14.45	33-07-25	9+88.37, 18.00 RT	10+02.05, 13.99 RT
C15	25'	15.08'	34-33-23	8+66.55, 14.00 RT	8+81.29, 18.20 RT
C16	25'	13.61'	31-11-47	8+81.29, 18.20 RT	8+94.76, 22.00 RT

CR 7
Delta = ~~80° 14' 30"~~ 78-19-43
Radius = 25.00'
Tangent length = ~~21.07'~~ 20.36'
Arc length = ~~35.01'~~ 34.18'
BCR STA: ~~10+01.11 RT 14.00~~ 10+02.05, RT 13.99
(ROSE BIGGI)
BCR ELEV = ~~180.03~~ 180.02
¼ DELTA = ~~179.92~~ 179.90
½ DELTA = ~~179.81~~ 179.78
¾ DELTA = ~~179.69~~ 179.66
ECR ELEV = ~~179.57~~ 179.51
ECR STA: ~~0+33.21, 11.50 RT~~ 0+32.59, RT 11.01
(CRESCENT)

CR 8
Delta = ~~95-18-15~~ 98-25-44
Radius = 25.00'
Tangent length = ~~27.43'~~ 28.98'
Arc length = ~~41.58'~~ 42.95'
BCR STA: ~~0+42.20 LT 12.80~~ 0+43.32, LT 10.99
(CRESCENT)
BCR ELEV = ~~179.75~~ 179.80
¼ DELTA = ~~179.69~~ 179.73
½ DELTA = ~~179.63~~ 179.66
¾ DELTA = ~~179.56~~ 179.59
ECR ELEV = ~~179.50~~ 179.52
ECR STA: STA: ~~10+73.09~~ 10+71.38 RT 12.00
(ROSE BIGGI)

CR 9
Delta = ~~33-20-50~~ 33-26-16
Radius = 25.00'
Tangent length = 7.52'
Arc length = ~~14.62'~~ 14.59'
BCR STA: ~~10+79.09, 12.00 RT~~ 10+71.38, RT 12.00
(ROSE BIGGI)
BCR ELEV = ~~179.75~~ 179.52
¼ DELTA = ~~179.58~~ 179.45
½ DELTA = ~~179.41~~ 179.39
¾ DELTA = ~~179.24~~ 179.32
ECR ELEV = ~~179.06~~ 179.26
ECR STA: 10+84.91, 15.48 RT
(ROSE BIGGI)

CR 15
Delta = 34-33-23
Radius = 25.00'
Tangent length = 7.78'
Arc length = 15.08'
BCR STA: 8+66.55 RT 14.00
(ROSE BIGGI)
BCR ELEV = 180.8
¼ DELTA = 180.71
½ DELTA = 180.62
¾ DELTA = 180.53
ECR ELEV = 180.44
ECR STA: 8+81.29 RT 18.20
(ROSE BIGGI)

CR 16
Delta = 31-11-47
Radius = 25.00'
Tangent length = 6.98'
Arc length = 13.61'
BCR STA: 8+81.29 RT 18.20
(ROSE BIGGI)
BCR ELEV = 180.44
¼ DELTA = 180.39
½ DELTA = 180.34
¾ DELTA = 180.28
ECR ELEV = 180.23
ECR STA: 8+94.76, 22.00 RT
(ROSE BIGGI)

CR 10
Delta = ~~28-33-44~~ 31-50-55
Radius = 25.00'
Tangent length = ~~6.36'~~ 7.13'
Arc length = ~~12.46'~~ 13.9'
BCR STA: 10+84.91 RT 15.48
(ROSE BIGGI)
BCR ELEV = 179.26
¼ DELTA = ~~179.20~~ 179.18
½ DELTA = ~~179.14~~ 179.11
¾ DELTA = ~~179.07~~ 179.04
ECR ELEV = ~~179.01~~ 178.96
ECR STA: ~~10+97.05 RT 19.84~~ 10+98.79, RT 20.00
(ROSE BIGGI)

CR 11
Delta = 36-19-15
Radius = 25.00'
Tangent length = 8.20'
Arc length = 15.85'
BCR STA: 10+74.69 LT 12.00
(ROSE BIGGI)
BCR ELEV = 179.48
¼ DELTA = 179.41
½ DELTA = 179.33
¾ DELTA = 179.26
ECR ELEV = 179.18
ECR STA: 10+89.47 LT 16.00
(ROSE BIGGI)

CR 12
Delta = 32-52-59
Radius = 25.00'
Tangent length = 7.38'
Arc length = 14.35'
BCR STA: 10+89.47 LT 16.00
(ROSE BIGGI)
BCR ELEV = 179.18
¼ DELTA = 179.11
½ DELTA = 179.05
¾ DELTA = 178.98
ECR ELEV = 178.91
ECR STA: 11+02.73, 20.00 LT
(ROSE BIGGI)

CR 13
Delta = 32-52-32
Radius = 25.00'
Tangent length = 7.38'
Arc length = 14.34'
BCR STA: 9+74.80 RT 22.00
(ROSE BIGGI)
BCR ELEV = 179.94
¼ DELTA = 179.95
½ DELTA = 179.96
¾ DELTA = 179.97
ECR ELEV = 179.98
ECR STA: 9+88.37 RT 18.00
(ROSE BIGGI)

CR 14
Delta = 33-07-25
Radius = 25.00'
Tangent length = 7.43'
Arc length = 14.45'
BCR STA: 9+88.37 RT 18.00
(ROSE BIGGI)
BCR ELEV = 179.94
¼ DELTA = 179.96
½ DELTA = 179.98
¾ DELTA = 180.00
ECR ELEV = 180.02
ECR STA: 10+02.05, 13.99 RT
(ROSE BIGGI)

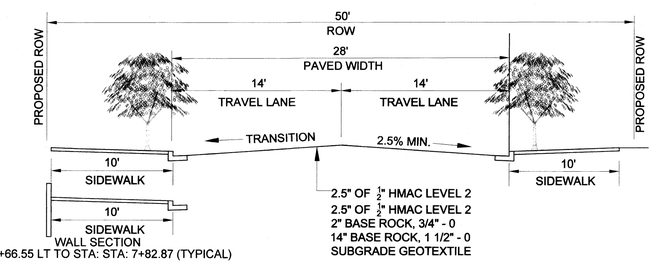

STA: 6+66.55 LT TO STA: STA: 7+82.87 (TYPICAL)

STA: 6+61.56 LT TO STA: STA: 7+87.76 LT (TRANSITION)
STA: 7+87.76 TO STA: 8+13.07 (EXTG. TRI-MET ROAD CROSSING AT FULL SUPER)
STA: 8+13.07 TO STA: 9+06.56 LT (TRANSITION)
STA: 9+06.56 TO STA: 10+68.66 LT (TYPICAL)

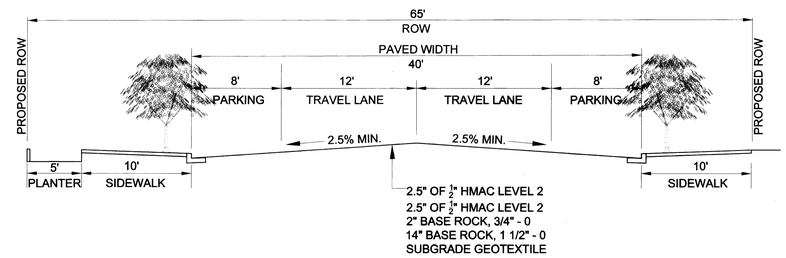

STA: 11+00.71 TO STA: 11+39.30 (TYPICAL)

STREET SECTION

3" ½" HMAC LEVEL 2
8" OF AGGREGATE BASE ROCK.

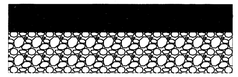

PARKING LOT SECTION

3" ½" HMAC LEVEL 2
4" OF AGGREGATE BASE ROCK

ASPHALT SIDEWALK SECTION

STREET DETAILS

AS-BUILT: CGOH 09-11-07 JEB

DRAFTED BY:	CG	DESIGNED BY:	JEB	REVIEWED BY:	TLW

REGISTERED PROFESSIONAL ENGINEER 15860PE OREGON APRIL 1, 1987 JAMES E. BRINK
EXPIRES: 12-31-07

SW ROSE BIGGI (SW MILLIKAN-SW CRESCENT)

WASHINGTON COUNTY

FEDERAL HIGHWAY ADMINISTRATION		PROJECT NUMBER	SHEET NO.
REGION 1	OREGON DIVISION	OREGON MAP RECORD | AB #18122_1810	4A

Project: CIP 3314 | QS: 3516
Date: 09/11/2007

Rose Biggi (Millikan-Crescent) | Street Imp.

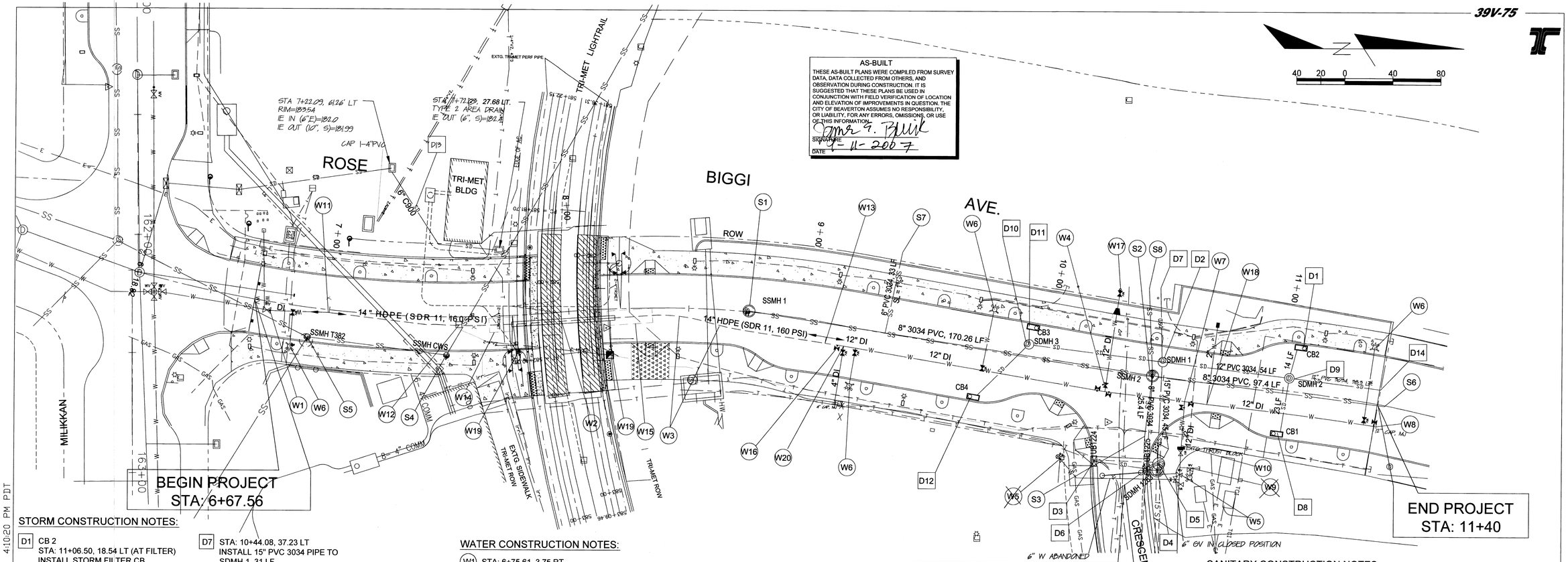

STORM CONSTRUCTION NOTES:

D1 CB 2
STA: 11+06.50, 18.54 LT (AT FILTER)
INSTALL STORM FILTER CB
GRATE ELEV. = 178.84
IE OUT 10" (E) = 175.94
INSTALL 10" PVC 3034, 14 LF
SLOPE = 0.15'/ft
SEE SHT 18

D2 SDMH 1
STA: 10+48.94, 6.59 LT
INSTALL 48" STD. MH
INSTALL NEW 15" PVC 3034 PIPE
TO SDMH UB1263
45 LF, SL = 0.009'/ft
SEE DETAILS, SHT. 22
SEE PROFILE, SHT 6

D3 CB 1224
STA: 10+26.75, 38.27 RT
GRATE ELEV = 179.47
REMOVE EXTG. 10" PIPE TO EXTG. MH
INSTALL NEW 10" PVC 3034 PIPE
TO NEW CURB INLET MH
27 LF, SL = 0.02'/ft
IE OUT (NE) 176.07

D4 SDMH 1263 (NEW)
STA: 10+52.44, 38.47 RT
INSTALL CURB INLET MH (CG 48)
SEE NOTE SHT 22, DWG. 195
RIM = 180.31
IE IN (10" S) = 175.46
IE IN (15" W) = 173.12
IE OUT (15" E) 172.99

D5 SDMH UB 1263
STA: 10+52.24, 35.70 RT
REMOVE EXTG 48" MH

D6 UB 1225
STA: 10+47.81, 38.51 RT
REMOVE EXTG. CB

D7 STA: 10+44.08, 37.23 LT
INSTALL 15" PVC 3034 PIPE TO
SDMH 1, 31 LF
CAP END OF PIPE
SL = 0.009'/ft
IE OUT = 173.57

D8 CB 1
STA: 11+06.50, 18.54 RT (AT FILTER)
INSTALL DEEP STEEL STORM FILTER CB
GRATE ELEV. = 178.71
IE OUT 10" (W) = 175.85
INSTALL 10" PVC 3034, 23 LF
SLOPE = 0.04'/ft
SEE SHT 18

D9 SDMH 2
STA: 11+01.98, 5.37 LT
INSTALL 48" STD. MH
INSTALL 12" PVC 3034, 54 LF (S)
INSTALL 12" PVC 3034, 38.3 LF (N)
SL = 0.005'/ft
SEE DETAIL, SHT 22
SEE PROFILE, SHT 6

D10 SDMH 3
STA: 9+92.34, 5.27 LT
INSTALL 48" STD. MH
SEE DETAIL, SHT 22
SEE PROFILE, SHT 6

D11 CB 3
STA: 9+94.17, 12.55 LT (AT FILTER)
INSTALL STORM FILTER CB
GRATE ELEV. = 180.00
IE OUT 10" (E) = 177.10
INSTALL 10" PVC 3034, 8 LF
SLOPE = 0.04'/ft
SEE SHT 18

D12 CB 4
STA: 9+72.01, 20.50 RT (AT FILTER)
INSTALL STORM FILTER CB
GRATE ELEV. = 179.90
IE OUT 10" (E) = 177.14
INSTALL 10" PVC 3034, 32.5 LF
SLOPE = .005'/ft
SEE SHT 18

D13 STA 7+72.09, 27.68 LT.
INSTALL TYPE 2 AREA DRAIN
INSTALL 60 LF 6" C-900 PIPE
STA 7+22.09, 6.26 LT.
CONNECT C-900 PIPE TO EXTG. CB

D14 STA: 11+40, 6.03 LT
INSTALL 12" PVC 3034 PIPE TO
SDMH 2, 38.3 LF
CAP END OF PIPE
SL = 0.001'/ft
IE OUT = 174.0

WATER CONSTRUCTION NOTES:

W1 STA: 6+75.61, 3.75 RT
REMOVE EXTG. BLOWOFF ASSEMBLY
CONNECT TO EXTG. 12" BFV
~~INSTALL CHLORINATION TAP~~
~~STA 6+76 INSTALL 2-12" 45D BENDS~~
~~STA 6+30 INSTALL 2-12" 45D BENDS~~
~~SEE INSTALLATION SHT 4005B~~

W2 STA: 7+76, 3.66 RT TO STA: 8+19, 3.74 RT
BORE 24" STEEL CASING UNDER TRACKS
SEE SHT. 6 AND DETAIL SHT. 16

W3 STA: 8+37, 2.92 RT
BEGIN REVERSE CURVE (30' MAX).
STA: 8+74, 7.93 RT
END REVERSE CURVE (30' MAX).
SEE DETAIL 1, SHT 16

W4 STA: 10+26.59, 7.30 RT
INSTALL 1 - 12" x 12" TEE, MJ
INSTALL 36 LF OF 12" DI PIPE
SEE DETAIL BELOW

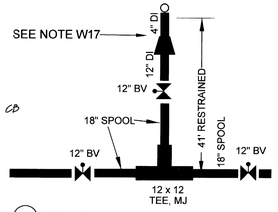

W5 ~~STA: 10+13.19, 39.50 RT~~
STA: 10+60.76, 29.90 RT
ADJUST VALVE BOX TO NEW GRADE
OUT OF SIDEWALK OR CURB

W6 STA: 6+85.75, 17.10 RT
STA: 9+21.63, 25.10 RT
STA: 9+75.44, 17.00 LT
~~STA: 11+37.07, 22.39 RT~~ STA 11+34.75, 23.12 LT
INSTALL FIRE HYDRANT ASSEMBLY
SEE COB DETAIL 626, SHT. 23

W7 STA: 10+61.72, 8.65 RT
1 - 12" x 12" TEE, MJ (TOP ELEV = 175.23)
2 - 12" BV, MJ
SEE DETAILS BELOW AND SHT. 23

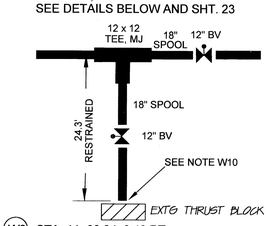

W8 STA: 11+39.24, 9.40 RT
RESTRAIN PIPE 55 LF FROM DEAD END
INSTALL 1 - 12" BFV, MJxMJ
INSTALL 12" CAP, MJ
INSTALL 12"X6" TEE & 29 LF 6" DIP FOR FH

W9 ~~STA: 10+84.87, 36 RT~~
~~REMOVE EXTG. 8" x 6" TEE, FH ASSY~~
~~(PIPE, VALVE, & HYDRANT),~~
~~AND 8" PIPE NORTH OF 8x6 TEE.~~
~~INSTALL 1 - COB STD 2" BLOWOFF W/8" GV~~

W10 STA: 10+60.48, 30.13 RT
~~REMOVE EXTG 4" GV AND 6 LF OF~~
EXTG PIPE TO EXTG 12x8 TEE.
INSTALL 27 LF OF 12" DI RESTRAINED PIPE
~~INSTALL 1 - TEMPORARY 4" BLOWOFF~~
CONNECT TO EXTG 12x8 TEE.
CONNECT TO EXTG 12" DIP WEST OF THRUST BLOCK.
INSTALL CALOR TAP.
INSTALL 243 LF OF 12" DIP W/ 2- 12" 11-1/4D BENDS.

W11 STA: 7+00, 3.66 RT
12" DI TO 14" HDPE TRANSITION
SEE DETAIL 2, SHT 16

W12 STA: 7+54, 3.66 RT 22-1/2°
INSTALL 1-14" HDPE ~~45°~~ BEND, VERT.

W13 STA: 8+99, 9.34 RT
14" HDPE TO 12" DI TRANSITION
SEE DETAIL 2, SHT 16

W14 CONSTRUCT RECEIVING PIT

W15 CONSTRUCT BORE PIT

W16 STA: 9+15, 9.36 RT
INSTALL 1 - 12" BV, MJ X MJ

W17 STA: 10+27.35, 33.97 LT
INSTALL 1 - 4"X12" REDUCER, MJ X MJ
INSTALL 6 LF 4" DI PIPE
INSTALL 1 - 4" 90D BEND, MJ X MJ
RESTRAIN 41' OF PIPE
INSTALL 1 - 4" TEMPORARY BLOWOFF
~~INSTALL 4" CAP W/ 2" IP THREAD & PLUG~~

W18 STA: 10+71, 9.05 RT
INSTALL 1 - 2" COPPER WATER SERVICE
PER COB STD DETAIL 641

W19 CP TEST STATION
STA: 7+77.98, 15.50 RT
STA: 8+17.01, 15.50 RT
SEE SHT 15
SEE TEST REPORT BY GEORGE RICHARDS

W20 STA: 9+16.41, 9.22 RT
INSTALL 1 - 12"X4" TEE, MJ
INSTALL 1 - 4" RSGV
INSTALL 24 LF 4" DI PIPE
(RESTRAIN ENTIRE LENGTH)
INSTALL 1 - 2" TEMPORARY BLOWOFF
INSTALL 1 - 4" CAP, MJ

AS-BUILT: CGO1 & JEB 09-11-07

SANITARY CONSTRUCTION NOTES:

S1 SSMH 1
STA: 8+73.95, 0.32 LT
INSTALL 48" MH
IE OUT (8", N) = 172.6
SEE DETAIL SHT. 22

S2 SSMH 2
STA: 10+45.08, 1.41 LT
INSTALL 48" MH
IE IN (8", W) = 171.50
IE IN (8", S) = 171.50
IE IN (8", N) = 171.50
IE OUT (8", E) = 171.30
SEE DETAIL SHT. 22

S3 STA: 10+45.29, 25.03 RT
CONNECT TO EXTG. 8" SAN. STUB-OUT
MATCH EXTG. GRADE
CALC. GRADE = 0.50%
CALC. IE = 171.20

S4 SSMH CWS
STA: 7+48.92, 16.00 RT
ADJUST EXTG. SAN MH TO
NEW S/W GRADE
EXTG. RIM ELEV = 183.89
NEW RIM ELEV. = 186.12

S5 SSMH T382
STA: 6+92.28, 12.00 RT
ADJUST EXTG. SAN MH TO
NEW STREET GRADE
EXTG. RIM ELEV = 186.91
NEW RIM ELEV. = 185.79

S6 STA: 11+42.80, 0.36 RT
INSTALL PLUG
IE OUT (8", S) = 172.10

S7 STA: 9+32.75, 31.50LT
INSTALL 6" PVC 3034 PIPE,
SL = 0.01'/FT
CAP & MARK WITH 4" PVC PIPE

S8 STA: 10+39.11, 36.36 LT
INSTALL 36.5 LF OF 8" PVC 3034
PIPE, SL = 0.006'/FT
CAP & MARK WITH 4" PVC PIPE

DRAFTED BY:	CG	DESIGNED BY:	JEB	REVIEWED BY:	TLW

REGISTERED PROFESSIONAL ENGINEER 15860PE OREGON APRIL 1, 1997 JAMES E. BRINK
EXPIRES: 12-31-07

SW ROSE BIGGI (SW MILLIKAN-SW CRESCENT)

WASHINGTON COUNTY

FEDERAL HIGHWAY ADMINISTRATION		PROJECT NUMBER	SHEET NO.
REGION 1	OREGON DIVISION	OREGON MAP RECORD | AB #18123_1810	5

Project: CP 8314 | QS: 3516
Date: 09/11/2007

Rose Biggi (Millikan-Crescent) | Street Imp.

Y:\Sdsk\3314-Henry-North\AS-BUILT\3314-henry-north-As-Built.dwg 09/17/2007 4:10:20 PM PDT

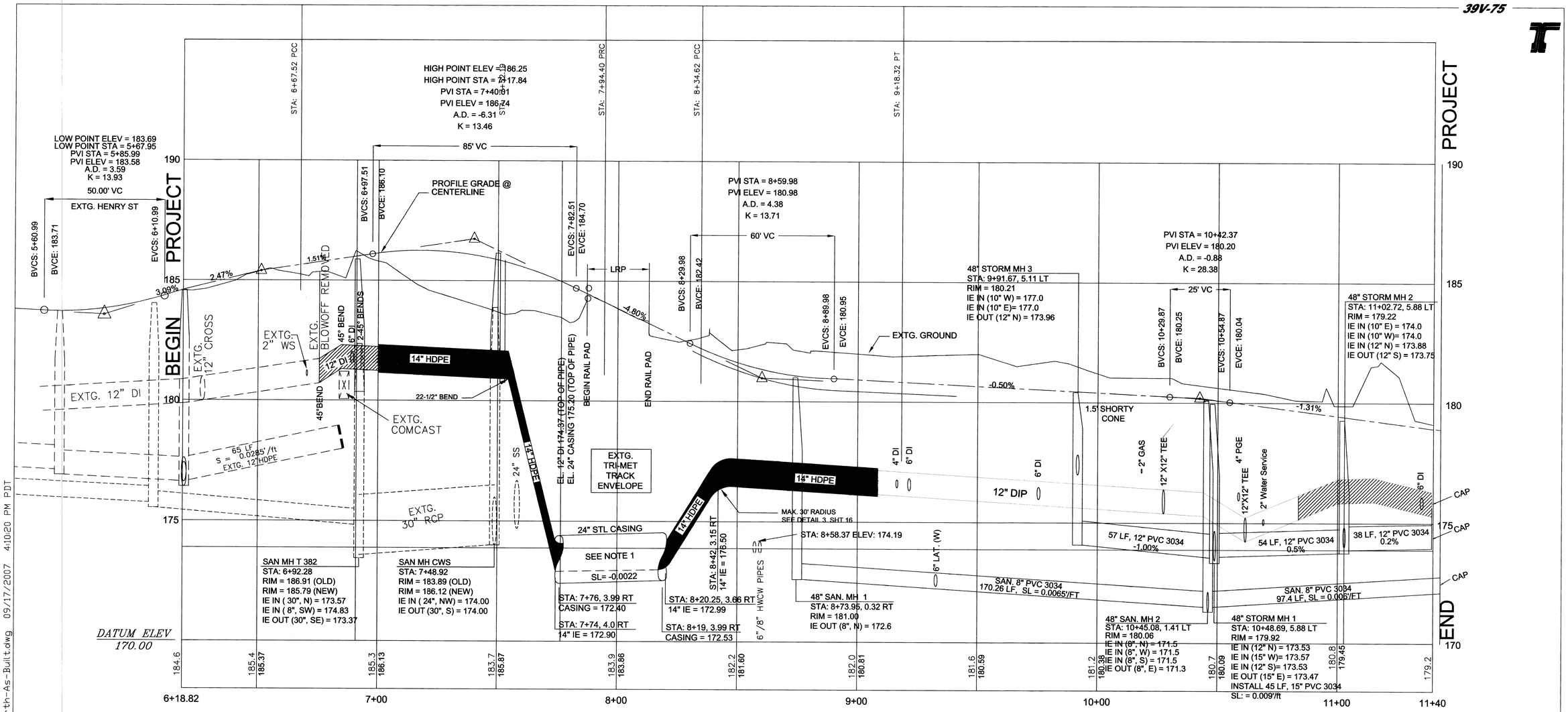

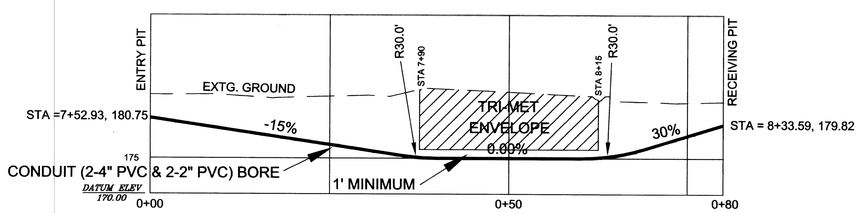

PGE - 1-4"
CITY - 1-4"
COMCAST - 2-2"

CONDUIT (2-4" PVC & 2-2" PVC) BORE

SCALE: 1" = 20' HOR
1" = 20' VERT

NOTES:

1. CONTRACTOR SHALL DRILL SMALL DIAMETER PILOT HOLE AT TOP OF CASING ALIGNMENT PRIOR TO CASING INSTALLATION TO VERIFY EXISTING DUCT BANK LOCATION.

MECHANICALLY RESTRAINED PIPE

AS-BUILT

THESE AS-BUILT PLANS WERE COMPILED FROM SURVEY DATA, DATA COLLECTED FROM OTHERS, AND OBSERVATION DURING CONSTRUCTION. IT IS SUGGESTED THAT THESE PLANS BE USED IN CONJUNCTION WITH FIELD VERIFICATION OF LOCATION AND ELEVATION OF IMPROVEMENTS IN QUESTION. THE CITY OF BEAVERTON ASSUMES NO RESPONSIBILITY, OR LIABILITY, FOR ANY ERRORS, OMISSIONS, OR USE OF THIS INFORMATION.

SIGNATURE James E. Brink
DATE 9-11-2007

AS-BUILT: CGOH & JEB 09-11-07 JEB

SCALE = 1"= 40' HORZ
1"= 4 VERT

DRAFTED BY:	CG	DESIGNED BY:	JEB	REVIEWED BY:	TLW

REGISTERED PROFESSIONAL ENGINEER 18542 OREGON JULY 10, 1998 JEFFREY S. JONES — EXPIRES: 6-30-07

REGISTERED PROFESSIONAL ENGINEER 15860PE OREGON APRIL 1, 1991 JAMES E. BRINK — EXPIRES: 12-31-07

SW ROSE BIGGI (SW MILLIKAN-SW CRESCENT)

WASHINGTON COUNTY

FEDERAL HIGHWAY ADMINISTRATION		PROJECT NUMBER	SHEET NO.
REGION 1	OREGON DIVISION	OREGON	6

MAP RECORD | AB #18124_1810
Project: CIP 3314 | OS: 3516
Date: 09/11/2007

Rose Biggi (Millikan-Crescent) | Street Imp.

Y:\Sdsk\3314-Henry-North\AS-BUILT\3314-henry-north-As-Built.dwg 09/17/2007 4:10:20 PM PDT

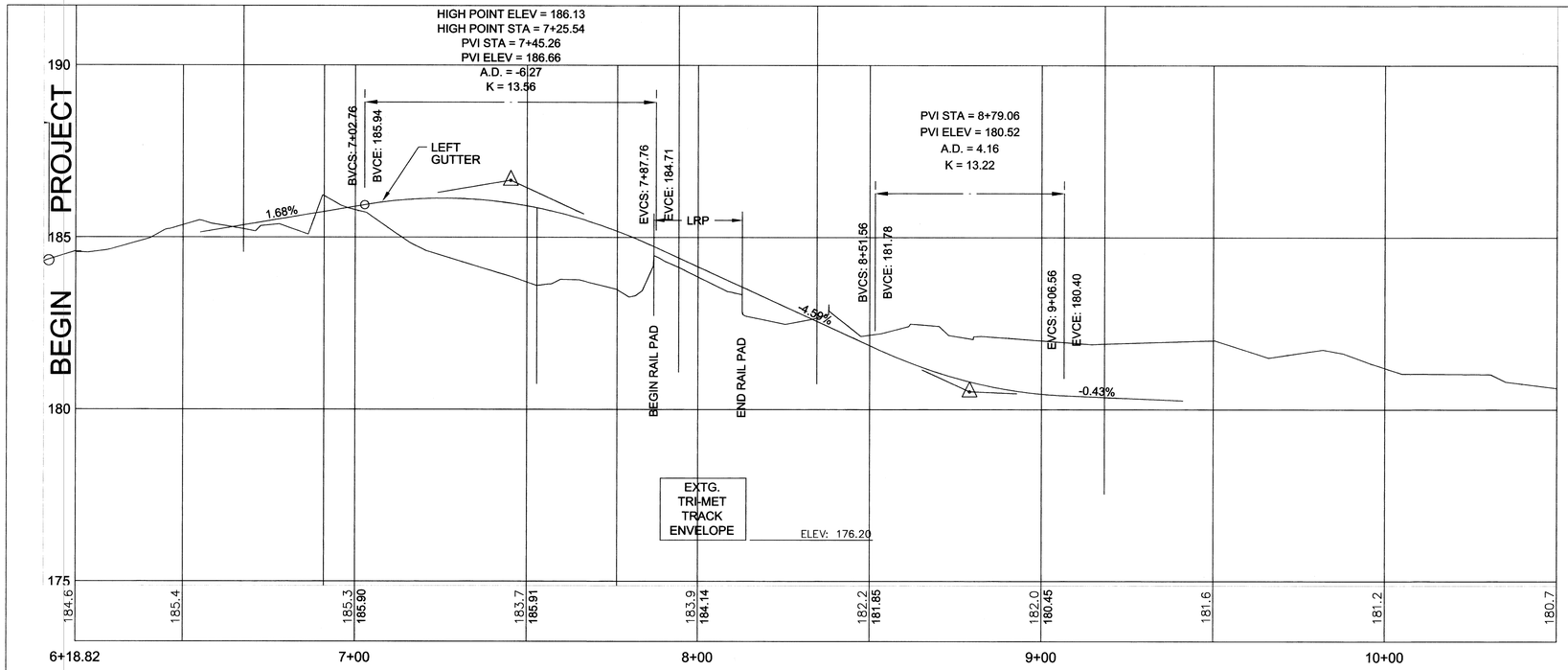

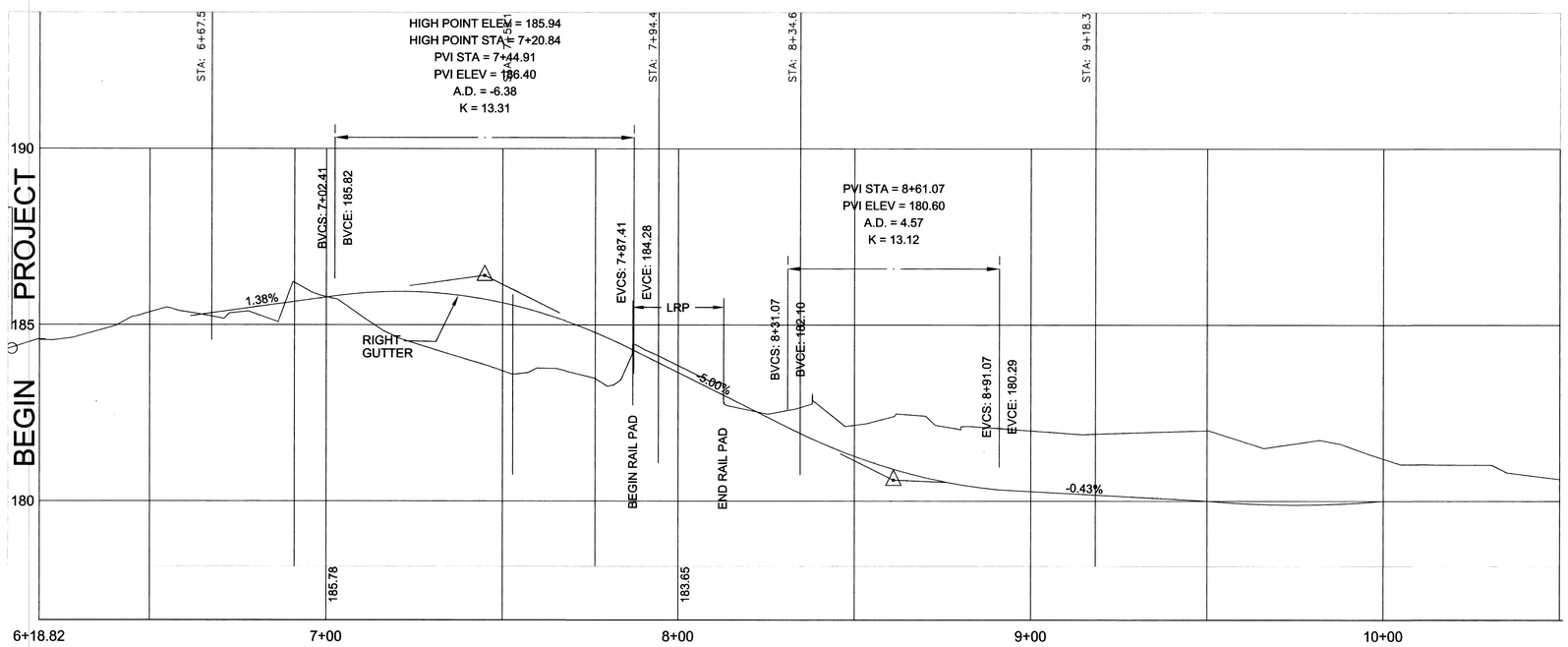

AS-BUILT

THESE AS-BUILT PLANS WERE COMPILED FROM SURVEY DATA, DATA COLLECTED FROM OTHERS, AND OBSERVATION DURING CONSTRUCTION. IT IS SUGGESTED THAT THESE PLANS BE USED IN CONJUNCTION WITH FIELD VERIFICATION OF LOCATION AND ELEVATION OF IMPROVEMENTS IN QUESTION. THE CITY OF BEAVERTON ASSUMES NO RESPONSIBILITY, OR LIABILITY, FOR ANY ERRORS, OMISSIONS, OR USE OF THIS INFORMATION.

SIGNATURE James E. Brink

DATE 9-11-2007

SCALE = 1"= 40' HORZ
1"= 4 VERT

AS-BUILT: CGOA 09-11-07 EB

DRAFTED BY:	CG	DESIGNED BY:	JEB	REVIEWED BY:	TLW

REGISTERED PROFESSIONAL ENGINEER 15860PE OREGON APRIL 1, 1991 JAMES E. BRINK
EXPIRES: 12-31-07

SW ROSE BIGGI (SW MILLIKAN-SW CRESCENT)

WASHINGTON COUNTY

FEDERAL HIGHWAY ADMINISTRATION		PROJECT NUMBER	SHEET NO.
REGION 1	OREGON DIVISION	OREGON MAP RECORD | AB #18125_1810 Project: CIP 3314 | QS: 3516 Date: 09/11/2007	7

Rose Biggi (Millikan-Crescent) | Street Imp.

Y:\Sask\3314-Henry-North\AS-BUILT\3314-henry-north-As-Built.dwg 09/17/2007 4:10:20 PM PDT

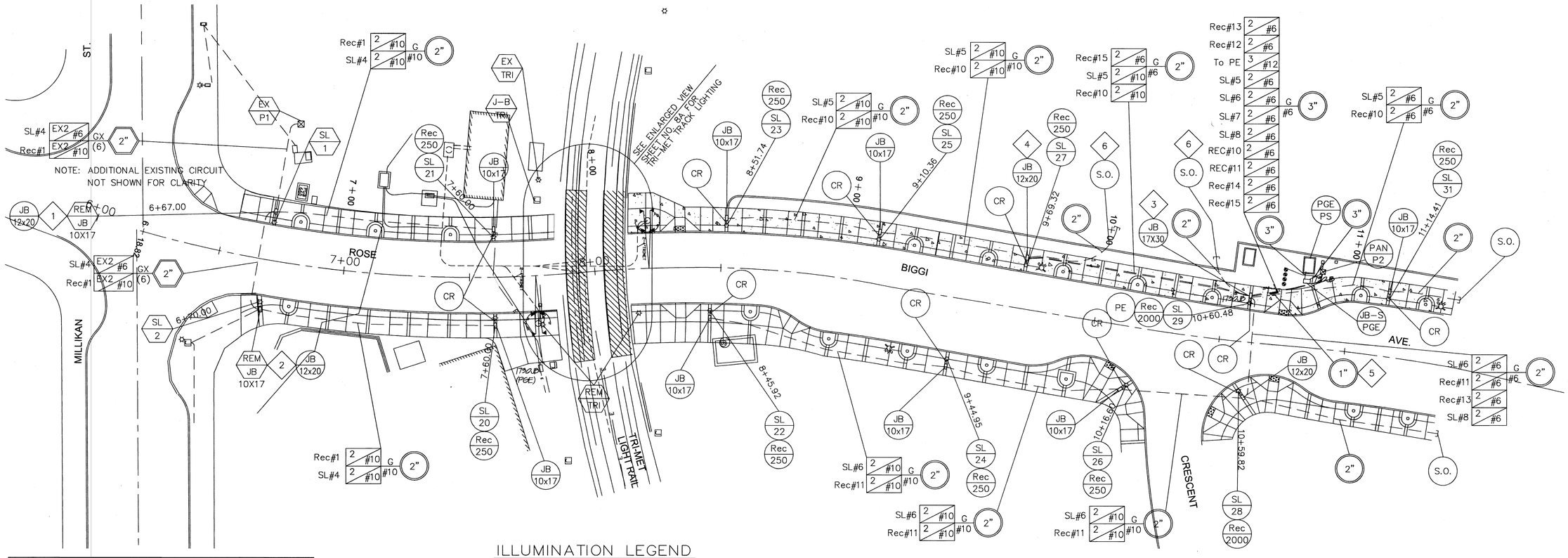

STREET LIGHT POLE TABLE

POLE NO.	STATION	OFFSET (FT.)	NOTES
20	7+60.00 (RT)	16.16	FTG
21	7+60.00 (LT)	16.65	FTG
22	8+45.92 (RT)	17.00	FTG
23	8+51.73 (LT)	16.97	FTG
24	9+44.95 (RT)	25.27	FTG
25	9+10.36 (LT)	16.23	FTG
26	10+12.67 (RT)	17.74	FTG
27	9+69.32 (LT)	16.44	FTG
28	10+59.80 (RT)	19.76	FTG
29	10+60.48 (LT)	14.49	FTG, PE
30	FUTURE		
31	11+14.22 (LT)	22.33	FTG

FTG – PRECAST CONCRETE FOOTING. SEE DETAILS SHEET NO. 7A.

PE – POLE SUPPLIED WITH ELECTRONIC PHOTO BUTTON CELL.

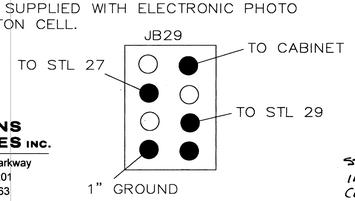

DAVID EVANS AND ASSOCIATES INC.
2100 Southwest River Parkway
Portland Oregon 97201
Phone: 503.223.6663

ILLUMINATION LEGEND

SL "N" — INSTALL 100 WATT METAL HALIDE LAMP IN ROUND GLOBE LUMINAIRE CATALOG #KG-20-LAC-III-100-MED-MH-240-K50 ON ORNATE ALUMINUM POLE CATALOG #KM90RE-13.9-GFI CANTERBURY AS MANUFACTURED BY KING LUMINAIRE. "N"=POLE NUMBER.

SL "N" — EXISTING STREET LIGHT POLE. "N"=NUMBER FROM PREVIOUS PROJECT.

JB 10x17 — INSTALL CONCRETE "BROOKS" JUNCTION BOX TYPE I, 10"X17" SIZE AT STREET LIGHT POLE. SEE DETAILS SHEET NO. 7A.

JB 12x20 — INSTALL CONCRETE "BROOKS" JUNCTION BOX TYPE II, 12"X20" SIZE AT EACH STREET LIGHT POLE. SEE DETAILS SHEET NO. 7A.

JB-S PGE — INSTALL POLYMER CONCRETE SECONDARY JUNCTION BOX 17"X30" (APPROX.) SIZE OPENING BY 18" DEEP PER PGE REQUIREMENTS, SEE DETAILS SHEET 11A.

REM JB 10X17 — REMOVE EXISTING CONCRETE "BROOKS" JUNCTION BOX, 10"X17" SIZE.

Rec "W" — GFI DUPLEX RECEPTACLE. "W"=MAXIMUM WATTAGE PER POLE'S RECEPTACLE.

S.O. — STUB OUT AND CAP CONDUIT. EXTEND 18" PAST NEW WORK AT LOCATION INDICATED.

"S", "S" — INSTALL/EXISTING "S"-SIZE PVC ELECTRICAL CONDUIT.

"N"/"S", EX"N"/"S" — INSTALL/EXISTING "N"-NUMBER OF "S"-SIZE XHHW COPPER WIRE ("N"=NUMBER OF CONDUCTORS, "S"=SIZE OF CONDUCTOR).

GX "S" — EXISTING "S" SIZE COPPER GROUND WIRE.

G "S" — INSTALL "S" SIZE COPPER GROUND WIRE.

PAN P2 — INSTALL PANEL NUMBER P2 FOR STREET LIGHTING AND RECEPTACLES. SEE DETAILS SHEET 10.

EX PI — EXISTING STREET LIGHTING CONTROLLER CABINET LOCATED IN NORTH WEST CORNER MILLIKAN ST. AND ROSE BIGGI AVE. FOR CABINET'S SERVICING WIRING DIAGRAM SEE SUPPLIER 'TESCO', SHOP DRAWING [CONTACT JIM BRINK PH (503)526-2450].

PGE PS — PGE POWER SUPPLY TRANSFORMER 120/240 VOLT, SINGLE PHASE.

PE — SEE DETAILS SHEET 9. POLE SUPPLIED WITH ELECTRONIC PHOTO BUTTON CELL.

CR — SHORT CONDUIT RUNS FROM CONCRETE JUNCTION BOX TO INSIDE POLE BASE. SEE "TYPICAL PULL BOX INSTALLATION" DETAIL SHEET 9.

REM TRI — REMOVE EXISTING TRI-MET'S TRACK LIGHTING POLE, SEE SPECIAL PROVISIONS.

EX TRI — EXISTING TRI-MET TRACK LIGHTING POLE. RETAIN AND PROTECT.

J-B TRI — EXISTING TRI-MET TRACK JUNCTION BOX. RETAIN AND PROTECT.

CONSTRUCTION NOTES

1. SPLICE CONDUCTORS FOR STREET LIGHT (SL#4) CIRCUIT TO THE EXISTING CONDUCTORS IN EXISTING 10"X17" JUNCTION BOX.
2. SPLICE CONDUCTORS FOR RECEPTACLE (REC#1) CIRCUIT TO THE EXISTING CONDUCTORS IN EXISTING 10"X17" JUNCTION BOX.
3. COIL 2 FT. OF CIRCUITS SL#7 AND REC#14 CONDUCTORS IN JUNCTION BOX (LABELED).
4. COIL 2 FT. OF CIRCUITS SL#8 AND REC#15 CONDUCTORS IN JUNCTION BOX (LABELED).
5. INSTALL BARE #6 GROUND WIRE TO GROUND ROD IN JUNCTION BOX.
6. CONTACT JIM BRINK, CITY OF BEAVERTON, AT (503) 526-2450 FOR LOCATION OF STUB OUTS.

STREET LIGHTING ELECTRICAL INSTALLED BY FRAHLER ELECTRIC COMPANY, 503-639-4627.

AS-BUILT: CGOH & JEB 09-11-07 JEB

REGISTERED PROFESSIONAL ENGINEER 12,197 OREGON JULY 15, 1983 KEITH R. RUDISIL
EXPIRES 12-31-06

0 20 40 80

POWER & LIGHTING PLAN

SW ROSE BIGGI (SW MILLIKAN-SW CRESCENT)

WASHINGTON COUNTY

FEDERAL HIGHWAY ADMINISTRATION		PROJECT NUMBER	SHEET NO.
REGION 1	OREGON DIVISION	OREGON	8

MAP RECORD | AB #18126_1810
Project: CIP 3314 | QS: 3516
Date: 09/11/2007
Rose Biggi (Millikan-Crescent) | Street Imp.

Y:\Sdsk\3314-Henry-North\AS-BUILT\ILL.dwg Jun. 18, 2009 - 9:04 AM jim brink
Plot Date:6/18/2009 6:29 PM_jim brink

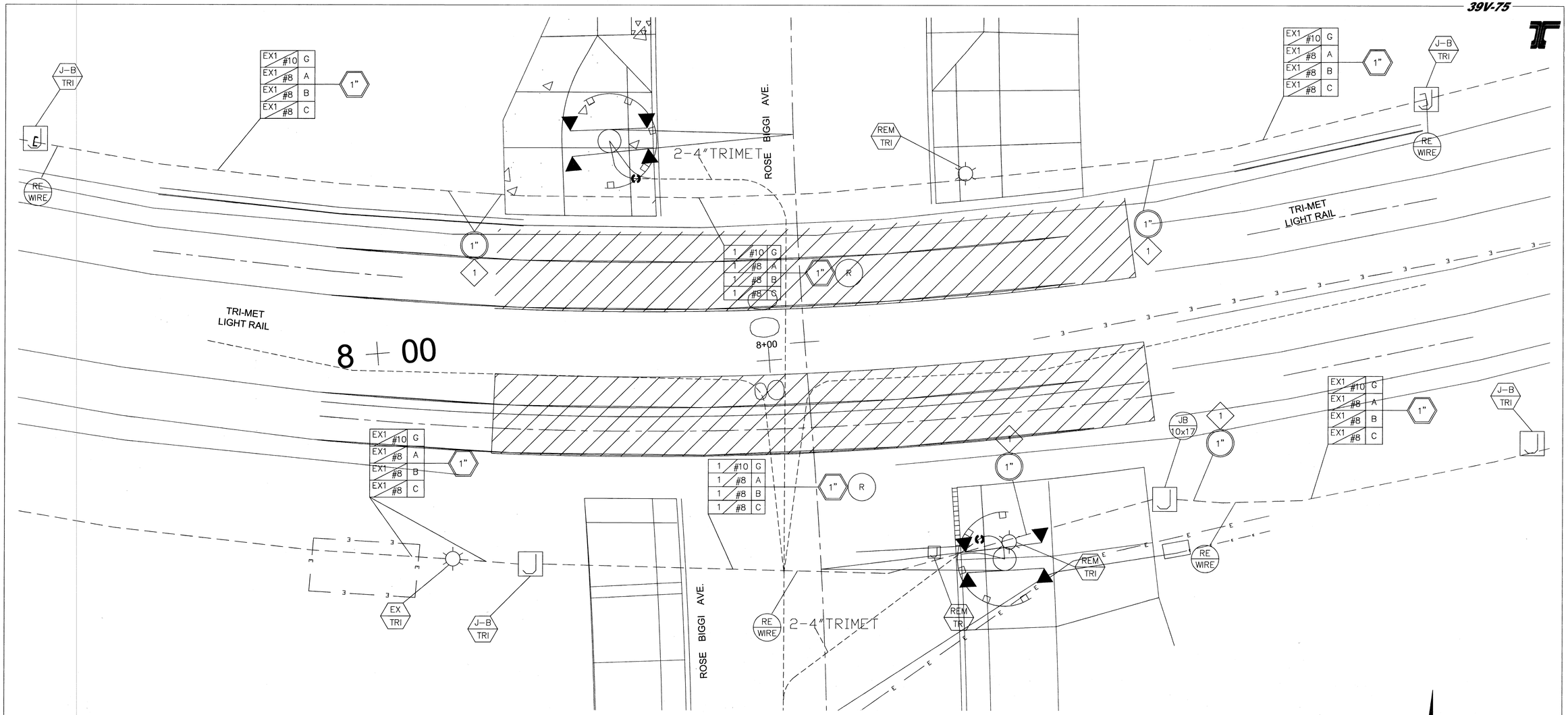

AS-BUILT: CGOH & JEB
09-11-07 JEB

ILLUMINATION LEGEND

- REM TRI — REMOVE EXISTING TRI-MET TRACK LIGHTING POLE, SEE SPECIAL PROVISIONS.
- EX TRI — EXISTING TRI-MET TRACK LIGHTING POLE. RETAIN AND PROTECT.
- J-B TRI — EXISTING TRI-MET JUNCTION BOX. RETAIN AND PROTECT.
- REM TRI — REMOVE EXISTING TRI-MET JUNCTION BOX.
- G, A, B, C — IDENTIFIES GROUND, OR PHASE LEG.
- R — REMOVE ALL EXISTING CONDUCTORS.
- A — ABANDON CONDUIT.
- CONN — CONNECT NEW CONDUIT TO EXISTING AND EXTEND INTO NEW JUNCTION BOX.
- RE WIRE — REWIRE BETWEEN JUNCTION BOXES.

NOTE: FOR ADDITIONAL "LEGEND" SEE SHEET NO. 8

TRI-MET GENERAL NOTES

CONDUIT – MINIMUM COVER 36"

JUNCTION BOX LIDS TO READ "TRI-MET LIGHTING"

CONSTRUCTION NOTES

1. EXTEND EXISTING OR NEW CIRCUITS THROUGH CONDUIT TO JUNCTION BOX.

DAVID EVANS AND ASSOCIATES INC.
2100 Southwest River Parkway
Portland Oregon 97201
Phone: 503.223.6663

REGISTERED PROFESSIONAL ENGINEER 12,197 OREGON JULY 15, 1983 KEITH R. RUDISIL
EXPIRES 12-31-06

N

0 5 10 20

POWER & LIGHTING PLAN

SW ROSE BIGGI (SW MILLIKAN-SW CRESCENT)

WASHINGTON COUNTY

FEDERAL HIGHWAY ADMINISTRATION		PROJECT NUMBER	SHEET NO.
REGION 1	OREGON DIVISION	OREGON	8A

MAP RECORD | AB #18127_1810
Project: CIP 3316 | QS: 3516
Date: 09/11/2007

Rose Biggi (Millikan-Crescent) | Street Imp.

Y:\Sdsk\3314-Henry-North\AS-BUILT\ILL.dwg Jun. 18, 2009 – 9:04 AM jim brink
Plot Date:6/18/2009 6:39 PM_jim brink

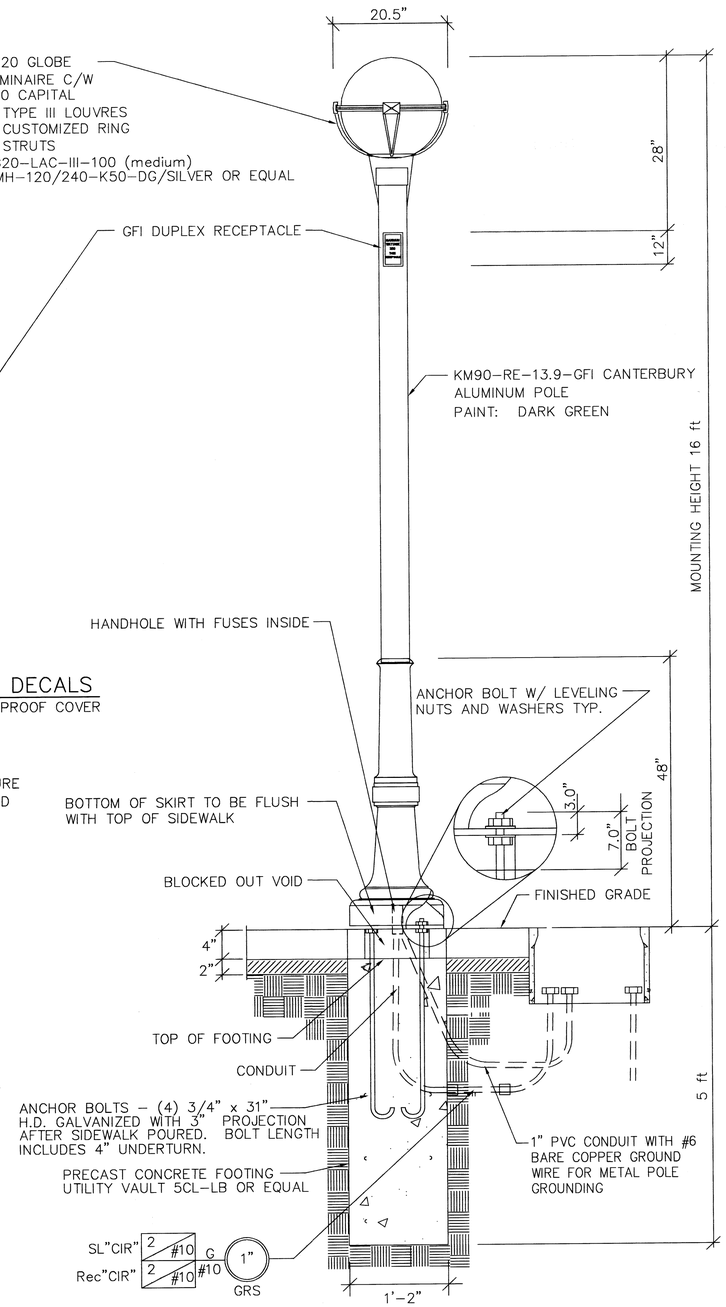

LIGHT POLE FOOTING INSTALLATION

N.T.S.

MAXIMUM WATTAGE 250 THIS RECEPTACLE

MAXIMUM WATTAGE 2000 THIS RECEPTACLE

RECEPTACLE WATTAGE LIMITATION DECALS

TO BE PLACED ON EXTERIOR SURFACE OF WEATHERPROOF COVER

NOTES:

1. LABELS MADE OF NON-CORROSIVE, PRESSURE SENSITIVE MATERIAL FOR OUTDOOR USE AND RESISTANT TO FADING AND ABRASION.
2. HAVE RED LETTERING/NUMBERS ON WHITE COLORED BACKGROUND.
3. USE POINT SIZE 18, LEADIN 21.5, FONT AERIAL BLACK, COLOR PMS185

NOTES:

1. HAND HOLE TO BE LOCATED UNDER 2 PIECE BASE SECTION.
2. STREET LIGHT J-BOX TO BE 3 ft MAX. FROM POLE.
3. ANCHOR BOLTS REQUIRE 7" PROJECTION 4" FOR SIDEWALK AND 3" FOR ADJUSTMENT HARDWARE
4. PROTECT/ COVER ANCHOR BOLTS WHEN CONCRETE FOR SIDEWALK IS PLACED

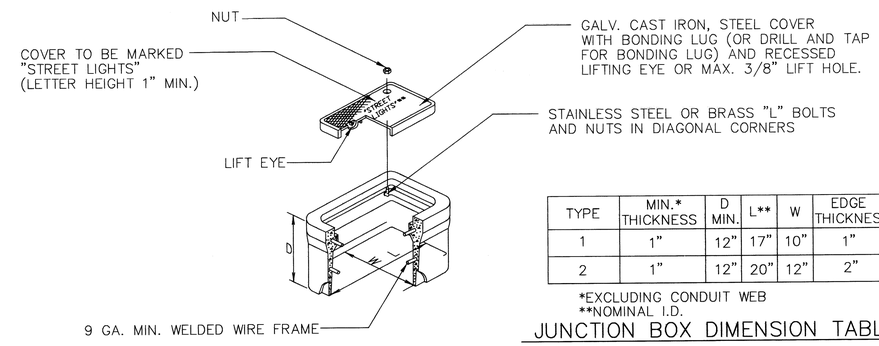

TYPE	MIN.* THICKNESS	D MIN.	L**	W	EDGE THICKNESS
1	1"	12"	17"	10"	1"
2	1"	12"	20"	12"	2"

*EXCLUDING CONDUIT WEB
**NOMINAL I.D.

JUNCTION BOX DIMENSION TABLE

STREET LIGHT JUNCTION BOX

N.T.S.

NOT TO BE USED IN TRAVEL LANES, SHOULDERS, OR AREAS EXPOSED TO TRAFFIC.
FOR LOCATION AND JUNCTION BOX DIMENSIONS, SEE PLANS.

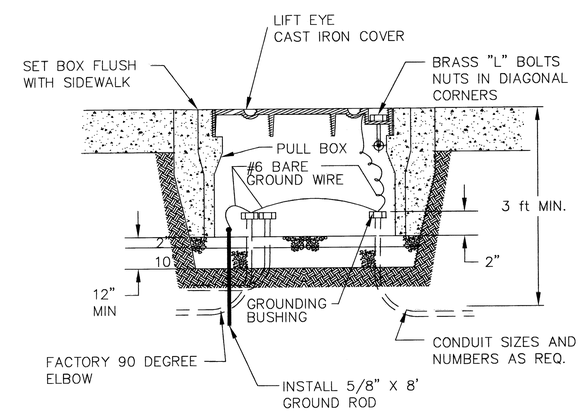

TYPICAL PULL BOX INSTALLATION

N.T.S.

AS-BUILT: CGOH & JEB
09-11-07 JEB

REGISTERED PROFESSIONAL ENGINEER 12,197 OREGON JULY 15, 1983 KEITH R. RUDISIL
EXPIRES 12-31-06

NOT TO SCALE

POWER & LIGHTING DETAILS

SW ROSE BIGGI (SW MILLIKAN-SW CRESCENT)

WASHINGTON COUNTY

FEDERAL HIGHWAY ADMINISTRATION		PROJECT NUMBER	SHEET NO.
REGION 1	OREGON DIVISION	OREGON	9

DAVID EVANS AND ASSOCIATES INC.
2100 Southwest River Parkway
Portland Oregon 97201
Phone: 503.223.6663

Y:\Sdsk\3314-Henry-North\AS-BUILT\LL2.dwg Jun. 18, 2009 - 10:37 AM jim brink
Plot Date:6/19/2009 7:53 AM_jim brink

MAP RECORD | AB #18128_1810
Project: CIP 3314 | QS: 3516
Date: 09/11/2007

NOTES

1. SERVICE PANEL FOR STREET LIGHTS SHALL BE CIRCLE AW'S CATALOG NO. CMP4121 MC-1 WITH MOUNTING BASE MB1515 AS FABRICATED BY B-LINE. CABINET SHALL BE U.L. LISTED LABEL ATTACHED TO CABINET FOR USE AS SERVICE EQUIPMENT AND BE RATED 3R. CABINET INCLUDES A 200 AMP MAIN AND BUS RATING FOR A SINGLE PHASE, 3 WIRE, 240 VOLT, METERED SERVICE, (OR APPROVED EQUAL)
2. SERVICE PANEL TO HAVE PROVISIONS FOR PADLOCK AND SEALING ON LINE A LOAD SIDES ACCESS DOORS. PANEL SHALL BE PAINTED A "LIGHT GREEN" COLOR INSIDE AND OUT.
3. THE SERVICE PANEL MAIN AND DISTRIBUTION CIRCUIT BREAKERS SHALL BE SHORT CIRCUIT CURRENT RATING OF 10,000 RMS SYMMETRICAL AMPERES AT 240 VAC.
4. THE ELECTRICAL HELD CONTRACTORS SHALL BE 30 AMP 2-POLE AS MANUFACTURED BY CUTLER HAMMER NO. C25DND230 OR APPROVED EQUAL.

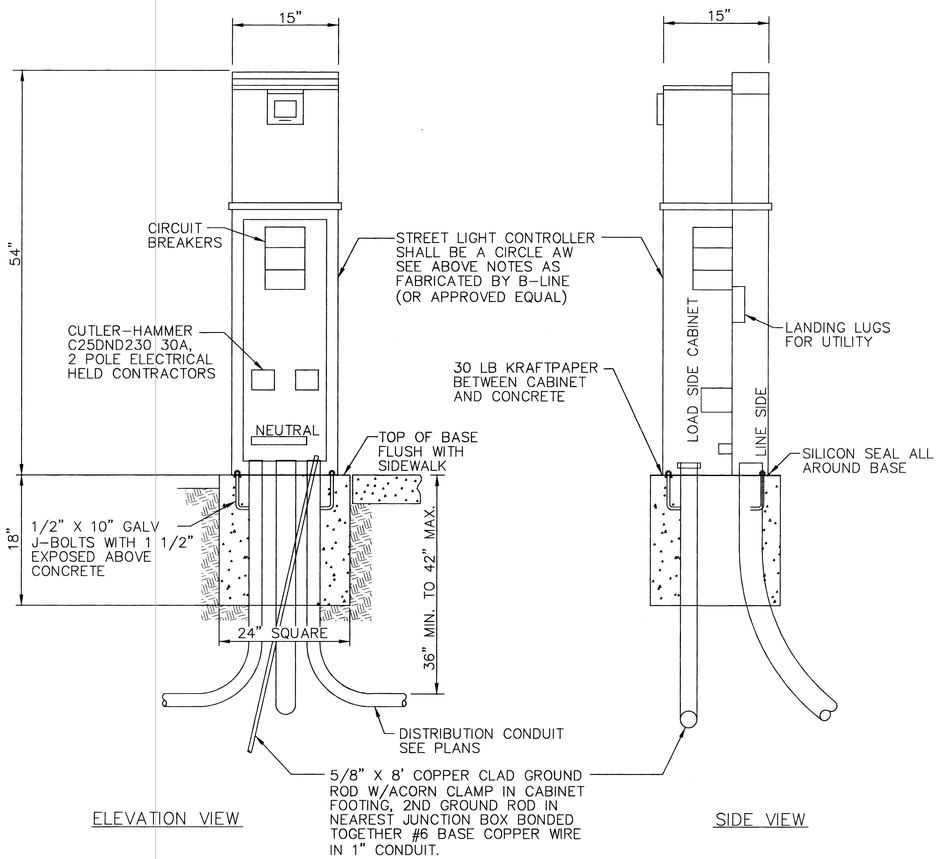

SERVICE PANEL CABINET INSTALLATION
N.T.S.

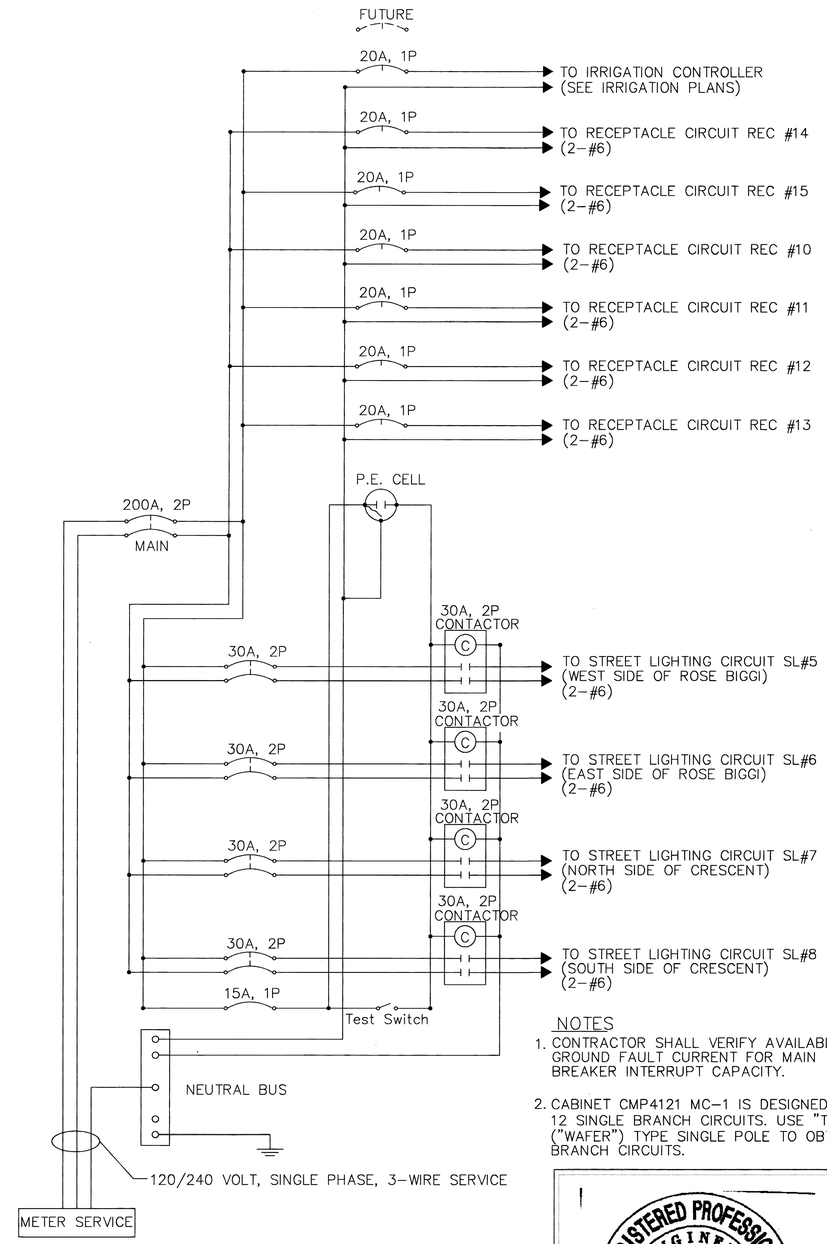

STREET LIGHTING CONTROL PANEL SCHEMATIC
N.T.S.

NOTES

1. CONTRACTOR SHALL VERIFY AVAILABLE GROUND FAULT CURRENT FOR MAIN BREAKER INTERRUPT CAPACITY.
2. CABINET CMP4121 MC-1 IS DESIGNED FOR 12 SINGLE BRANCH CIRCUITS. USE "TWIN" ("WAFER") TYPE SINGLE POLE TO OBTAIN 16 BRANCH CIRCUITS.

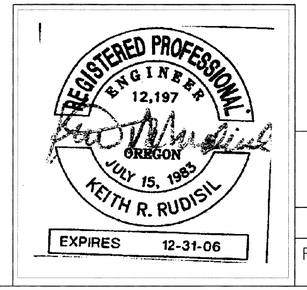

AS-BUILT: CGOH & JEB
09-11-07 JEB

NOT TO SCALE

POWER & LIGHTING DETAILS

SW ROSE BIGGI (SW MILLIKAN-SW CRESCENT)

WASHINGTON COUNTY

FEDERAL HIGHWAY ADMINISTRATION		PROJECT NUMBER	SHEET NO.
REGION 1	OREGON DIVISION	OREGON	10

DAVID EVANS AND ASSOCIATES INC.
2100 Southwest River Parkway
Portland Oregon 97201
Phone: 503.223.6663

Y:\Sdsk\3314-Henry-North\AS-BUILT\ILL3.dwg Jun. 18, 2009 - 6:49 PM jim brink
Plot Date:6/19/2009 8:43 AM_jim brink

MAP RECORD | AB #18129_1810
Project: CIP 3314 | QS: 3516
Date: 09/11/2007
Rose Biggi (Millikan-Crescent) | Street Imp.

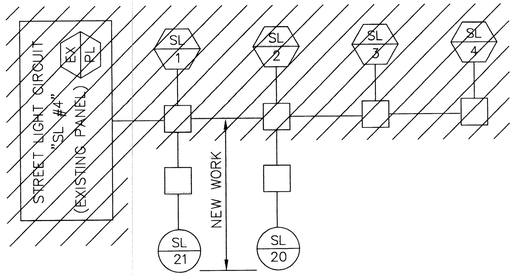

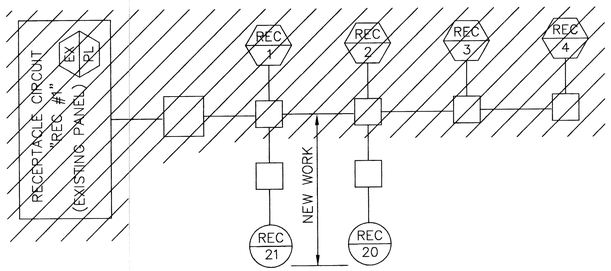

CIRCUIT DIAGRAMS PANEL EX PI REVISED

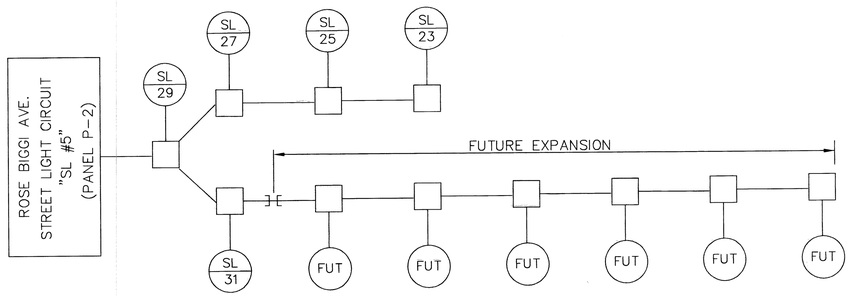

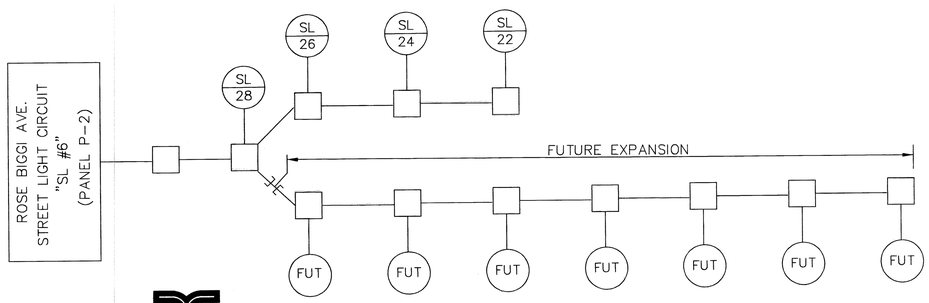

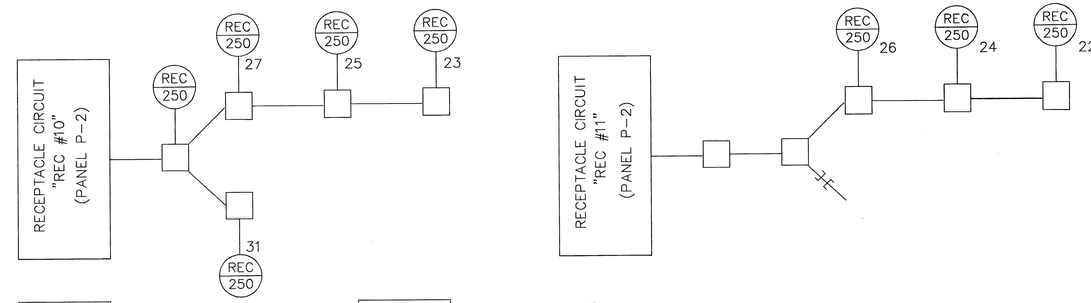

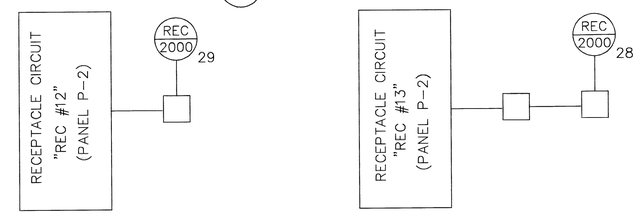

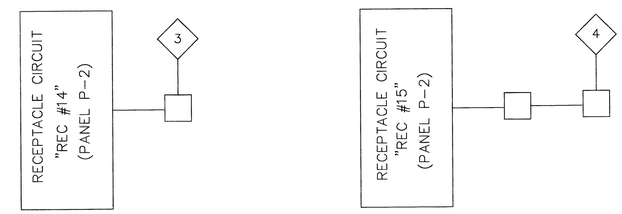

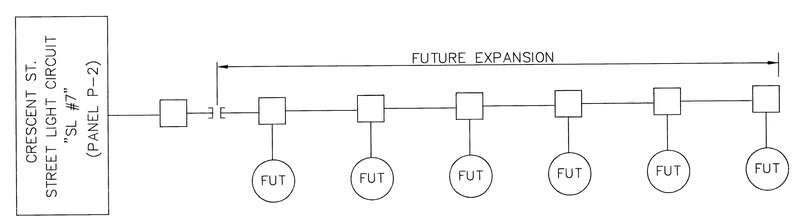

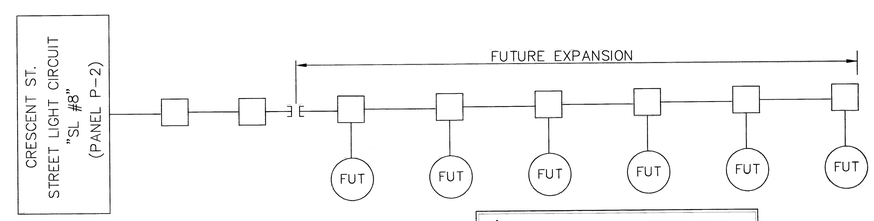

WIRING SCHEMATICS LEGEND

- JUNCTION BOX
- SL "N" — STREET LIGHT POLE NUMBER "N"
- FUT — FUTURE STREET LIGHT
- REC "W" "N" — RECEPTACLE MAXIMUM WATTAGE "W" AT POLE NUMBER "N"
- 3, 4 — SEE CONSTRUCTION NOTES SHEET NO. 8

REGISTERED PROFESSIONAL ENGINEER 12,197 OREGON JULY 15, 1983 KEITH R. RUDISIL
EXPIRES 12-31-06

AS-BUILT: CGOH & JEB 09-11-07 JEB

NOT TO SCALE

POWER & LIGHTING DETAILS

SW ROSE BIGGI (SW MILLIKAN-SW CRESCENT)

WASHINGTON COUNTY

FEDERAL HIGHWAY ADMINISTRATION		PROJECT NUMBER	SHEET NO.
REGION 1	OREGON DIVISION	OREGON	11

DAVID EVANS AND ASSOCIATES INC.
2100 Southwest River Parkway
Portland Oregon 97201
Phone: 503.223.6663

WIRING SCHEMATICS

Y:\Sdsk\3314-Henry-North\AS-BUILT\LL4.dwg Jun. 18, 2009 - 10:59 AM jim brink
Plot Date:6/19/2009 8:27 AM_jim brink

MAP RECORD | AB #18130_1810
Project: CIP 3314 | QS: 3516
Date: 09/11/2007
Rose Biggi (Millikan-Crescent) | Street Imp.

UTILITY VAULT N.T.S.
PGE 1730 SPLICE BOX

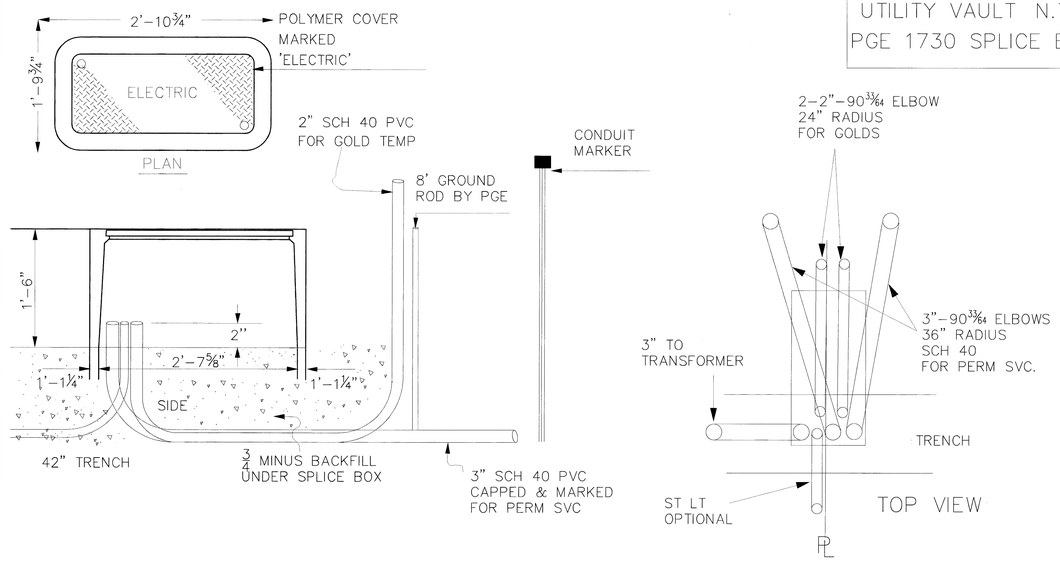

ALL SECONDARY VAULTS (1730) TO BE INSTALLED ON PROPERTY LINES WITHIN THE UTILITY EASEMENT AND AT FINAL GRADE. ALTERNATE LOCATIONS MUST BE APPROVED BY PGE AND WILL BE NOTED ON THE SKETCH.

COST FOR THE RELOCATIONS OR ADJUSTMENTS OF 1730 VAULTS WILL BE THE RESPONSIBILITY OF THE REQUESTING PARTY (BUILDER/DEVELOPER). PGE APPROVALS OF INSTALLATION WILL BE BASED ON FINAL GRADE AND LOCATION CRITERIA SET BY THE DEVELOPER OR HIS AGENT.

JB-s PGE — PGE Secondary Junction Box

COMMERCIAL SERVICE INSTALLATIONS FOR STREET LIGHT CONDUIT/JUNCTION BOX SYSTEM

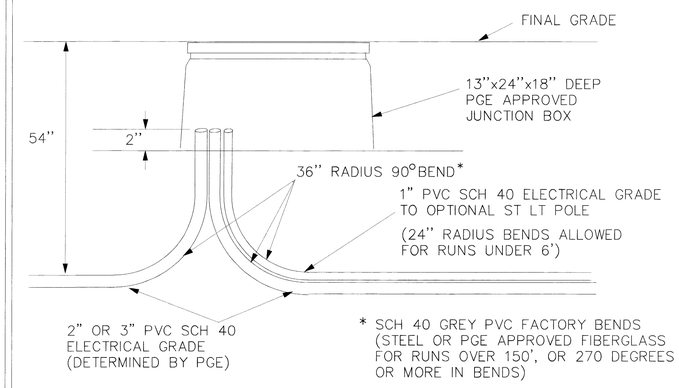

JB-s PGE — PGE Street Light Junction Box

DAVID EVANS AND ASSOCIATES INC.
2100 Southwest River Parkway
Portland Oregon 97201
Phone: 503.223.6663

AS-BUILT: CGOM 09-11-07 EB

NOT TO SCALE

POWER & LIGHTING DETAILS

SW ROSE BIGGI (SW MILLIKAN-SW CRESCENT)

WASHINGTON COUNTY

FEDERAL HIGHWAY ADMINISTRATION		PROJECT NUMBER	SHEET NO.
REGION 1	OREGON DIVISION	OREGON MAP RECORD | AB #18131_1810	11A

Project: CIP 3314 | QS: 3516
Date: 09/11/2007

Rose Biggi (Millikan-Crescent) | Street Imp.

Y:\Sdsk\3314-Henry-North\AS-BUILT\ILL5_2000.dwg SEPT. 20, 2007 - 12:50 PM charlie goh
Plot Date:SEPT. 20, 2007 charlie goh

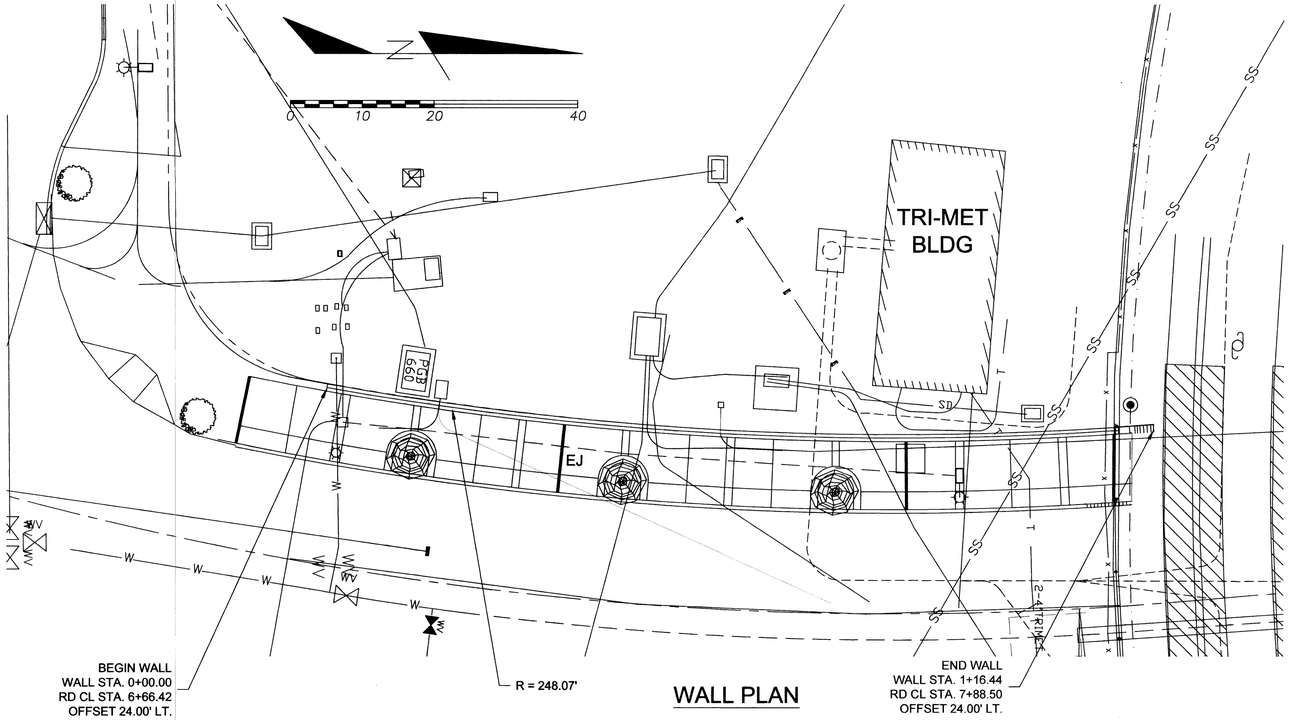

WALL PLAN

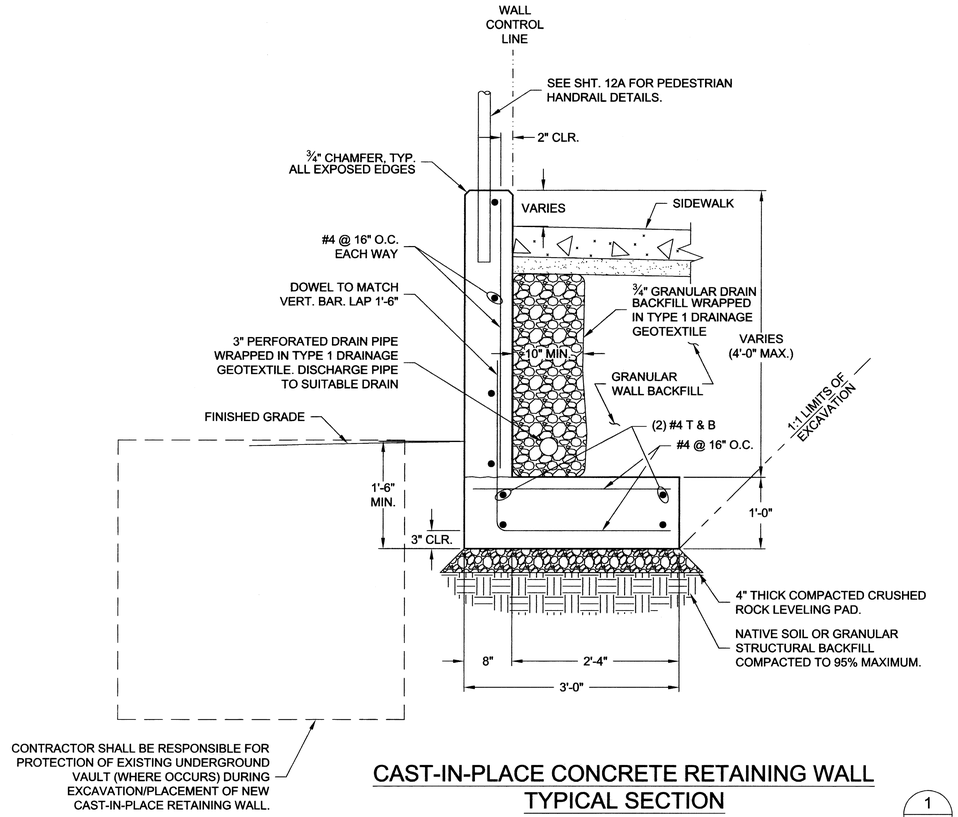

CAST-IN-PLACE CONCRETE RETAINING WALL TYPICAL SECTION

NTS

1 / -

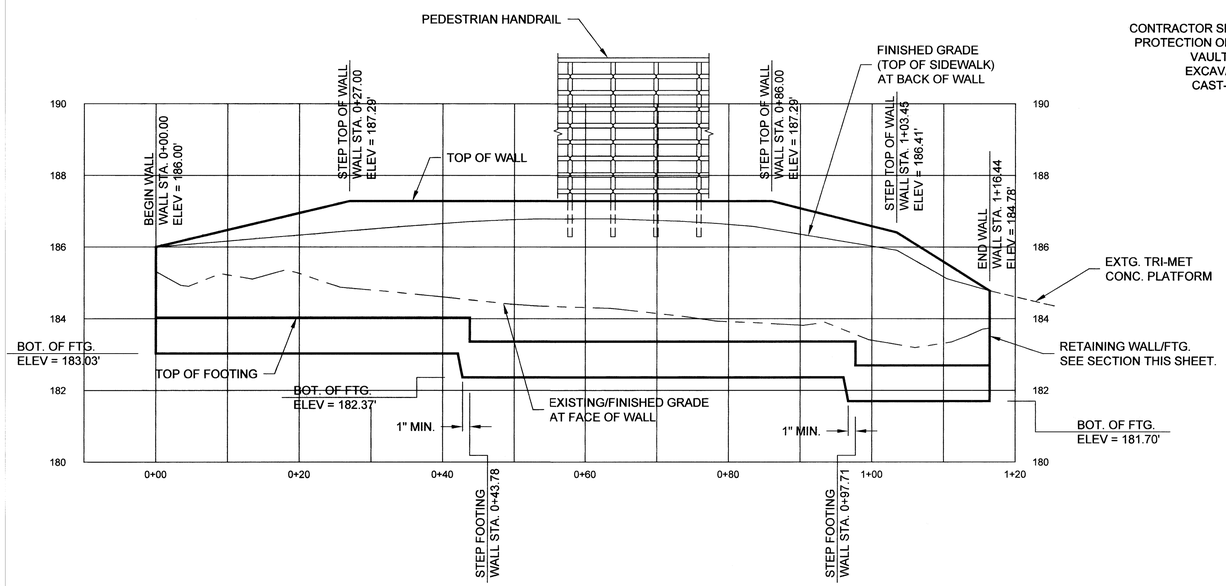

WALL PROFILE

NOTES:

1. CONTRACTOR RESPONSIBLE FOR LOCATING AND PROTECTING ALL UTILITES DURING CONSTRUCTION.
2. SEE PROJECT SPECIFICATIONS FOR MATERIAL PROPERTIES (CONCRETE STRENGTH, REINFORCING STEEL GRADE, ETC.)

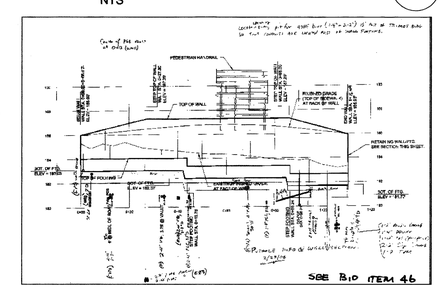

STRUCTURAL REGISTERED PROFESSIONAL ENGINEER 17488PE OREGON JAN. 23, 2001 PHILIP ALLEN BOULTINGHOUSE

EXPIRES 12-31-07

AS-BUILT: CGOH & JEB 09-11-07 JEB

SCALE = 1"= 20' HORZ
1"= 4' VERT

RETAINING WALL PLAN, PROFILE AND SECTION

SW ROSE BIGGI (SW MILLIKAN-SW CRESCENT)

WASHINGTON COUNTY

FEDERAL HIGHWAY ADMINISTRATION		PROJECT NUMBER	SHEET NO.
REGION 1	OREGON DIVISION	OREGON	12

DAVID EVANS AND ASSOCIATES INC.
2100 Southwest River Parkway
Portland Oregon 97201
Phone: 503.223.6663

Y:\Sdpk\3314-Henry-North\AS-BUILT\Wall1.dwg Jun. 06, 2006 – 5:14 PM jim brink
Plot Date:6/19/2009 11:48 AM jim brink

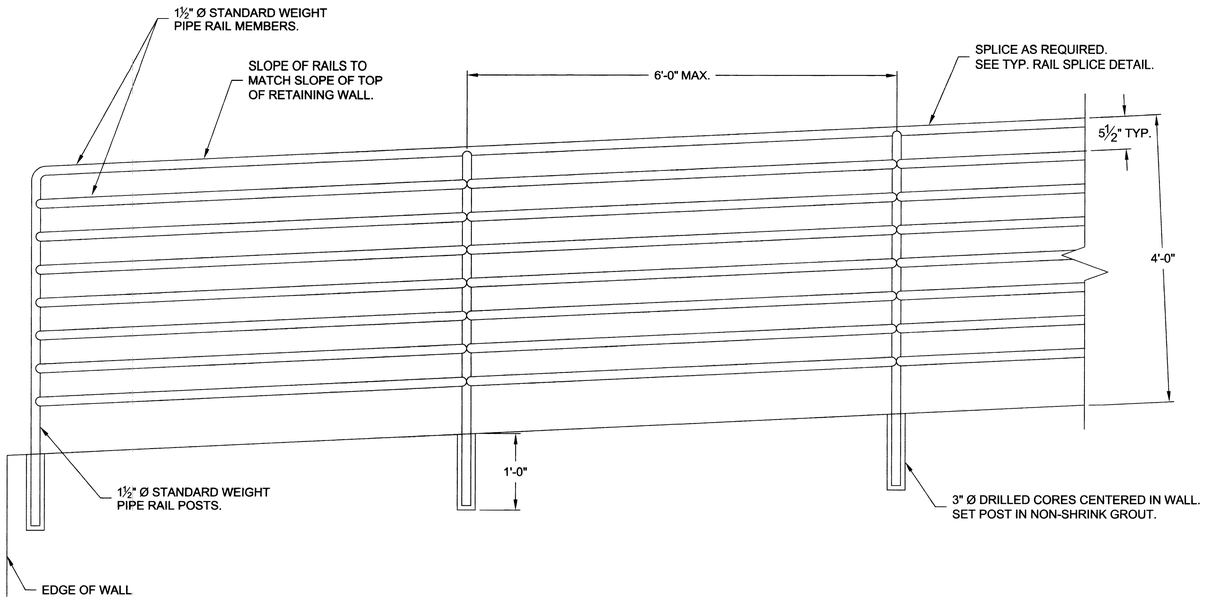

ELEVATION

NTS

1 / -

RAIL NOTES:

1. POST AND RAILS SHALL BE STANDARD STEEL PIPE CONFORMING TO ASTM A53, GRADE B.
2. RAILING SHALL CONFORM TO THE VERTICAL ALIGNMENT OF THE STRUCTURE. POSTS SHALL BE VERTICAL. THE TOP RAIL SHALL BE CONTINUOUS OVER A MINIMUM OF TWO POSTS.
3. ALL PARTS SHALL BE HOT-DIPPED GALVANIZED.
4. POSTS, RAILING & SPLICES SHALL BE PAINTED AS DIRECTED.
5. VERTICAL PIPE RAIL POSTS SHALL BE EVENLY SPACED.

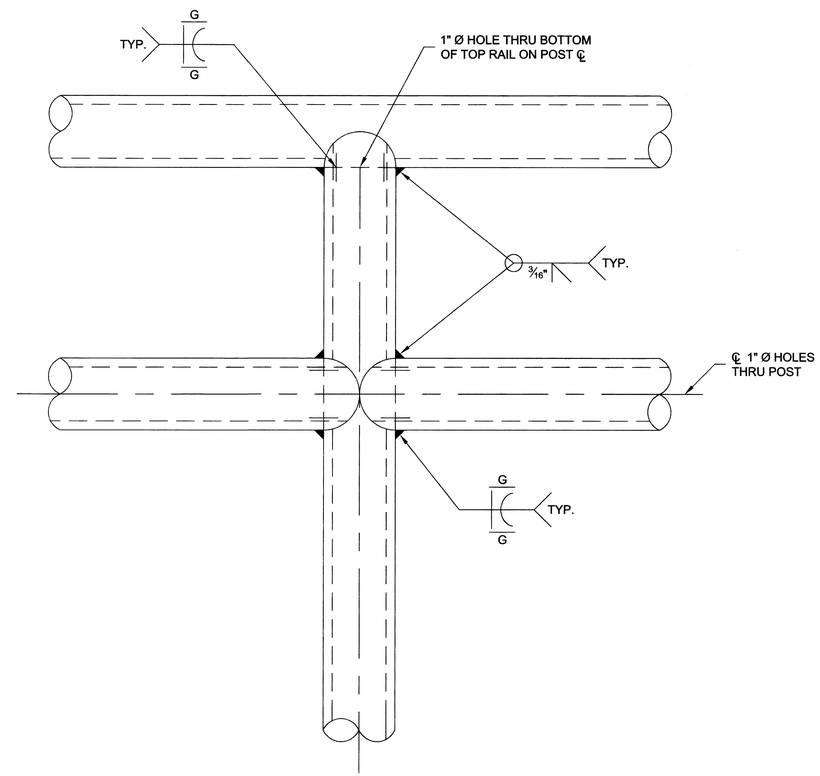

WELD DETAILS

NTS

3 / -

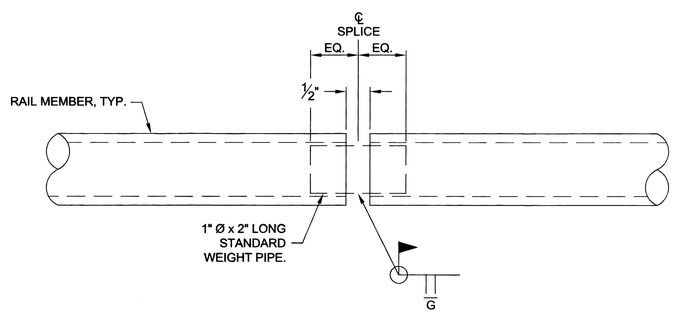

TYPICAL RAIL SPLICE DETAIL

NTS

2 / -

DAVID EVANS AND ASSOCIATES INC.
2100 Southwest River Parkway
Portland Oregon 97201
Phone: 503.223.6663

AS-BUILT: CGOH & JEB
09-11-07

STRUCTURAL REGISTERED PROFESSIONAL ENGINEER 17488PE OREGON JAN. 23, 2001 PHILIP ALLEN BOULTINGHOUSE

EXPIRES 12-31-07

NOT TO SCALE

RETAINING WALL RAIL DETAILS

SW ROSE BIGGI (SW MILLIKAN-SW CRESCENT)

WASHINGTON COUNTY

FEDERAL HIGHWAY ADMINISTRATION		PROJECT NUMBER	SHEET NO.
REGION 1	OREGON DIVISION	OREGON	12A

MAP RECORD | AB #18133_1810
Project: CLP 3314 | QS: 3516
Date: 09/11/2007
Rose Biggi (Millikan-Crescent) | Street Imp.

Y:\Sdsk\3314-Herr-North\AS-BUILT\Wall2.dwg Jun. 19, 2009 - 9:34 AM jim brink
Plot Date:6/19/2009 9:34 AM jim brink

COMMON UTILITY TRENCH DETAILS

GENERAL NOTES:

1. COMCAST WILL SUPPLY 2" CONDUIT TO BE INSTALLED BY CONTRACTOR.
2. NWNG WILL INSTALL 2" GAS LINE. CONTRACTOR SHALL COORDINATE WITH NWNG TO INCLUDE BUT NOT LIMITED TO SCHEDULE OF WORK AND PLACEMENT OF NWNG PIPE IN JOINT TRENCH WHERE POSSIBLE.
3. CONDUIT SHALL BE PLACED IN A JOINT TRENCH WHENEVER POSSIBLE.
4. MAINTAIN 12 VERTICAL INCHES AND 12 HORIZONTAL INCHES BETWEEN UTILITIES UNLESS OTHERWISE SPECIFIED.
5. ALL BENDS SHALL BE FACTORY MADE. BENDS FOR 4" PVC SHALL HAVE A 3-FOOT RADIUS. BENDS FOR VERIZON CONDUIT MAY BE PVC SCHEDULE 40. BENDS FOR PGE CONDUIT RUNS SHALL BE STEEL OR PGE APPROVED FIBERGLASS.
6. ALL CONDUIT SHALL HAVE PULL STRING & PLUGS INSTALLED. PULL STRINGS SHALL BE NYLON WITH A MIN TEST STRENGTH OF 500 LBS.
7. INSTALL UTILITY MARKER TAPE CONTINUOUSLY IN BACKFILL DIRECTLY OVER BURIED CONDUIT 24" BELOW FINISHED GRADE.
8. TEST ALL CONDUIT BY BLOWING OR MANDRELLING EXCEPT THAT TRI-MET CONDUIT SHALL BE MANDRELLED.
9. MINIMUM COVER FOR CONDUIT IS 36" UNLESS OTHERWISE SPECIFIED.
10. CONDUIT RUNS BETWEEN STRUCTURES SHALL REMAIN PARALLEL AND NOT CROSS.
11. VAULTS AND THE PADMOUNT REQUIRE A BEDDING THICKNESS OF 6" OF CLASS B CRUSHED AGG.
12. CONDUIT THAT TERMINATES OUTSIDE OF A STRUCTURE SHALL EXTEND 2" ABOVE THE GROUND AND BE CAPPED.
13. THE BACK (EAST) SIDE OF THE TRANSFORMER PAD AT STA 7+34L SHALL BE 3 FEET FROM THE FACE OF THE WALL.
14. STRUCTURES ARE TO BE SET SO THAT THE TOP IS 2" ABOVE FINAL GRADE.
15. CONDUIT TO PADS SHALL EXTEND 1" ABOVE THE PAD.
16. INSTALL PGE FACILITIES IN ACCORDANCE WITH PGE PLANS. SEE SECTION 00995.70 OF PROJECT SPECIAL PROVISIONS. SEE PROJECT ENGINEER FOR COPY OF PGE PLANS.

AS-BUILT

THESE AS-BUILT PLANS WERE COMPILED FROM SURVEY DATA, DATA COLLECTED FROM OTHERS, AND OBSERVATION DURING CONSTRUCTION. IT IS SUGGESTED THAT THESE PLANS BE USED IN CONJUNCTION WITH FIELD VERIFICATION OF LOCATION AND ELEVATION OF IMPROVEMENTS IN QUESTION. THE CITY OF BEAVERTON ASSUMES NO RESPONSIBILITY, OR LIABILITY, FOR ANY ERRORS, OMISSIONS, OR USE OF THIS INFORMATION.

James E. Brink
SIGNATURE
9-11-2007
DATE

CONSTRUCTION NOTES:

(1) TRIMET TRACK LIGHTING: INSTALL 34 LF OF 2" SCH. 40 PVC AND THREE (3) J-BOXES (10X17) W/ GALV. STEEL DIAMOND PLATE COVERS, AND REWIRE TO MAKE LIGHTING OPERATIONAL.
(2) INSTALL ELECTRONIC MARKER PROVIDED BY VERIZON
(3) INSTALL LOCATE RISER W/ FINK (BY NWNG)
STA: 10+18.76, 35.45 LT
STA: 11+39, 28.53 RT *(2" gas located here but no fink)*
(4) INSTALL 2X3X2 HANDHOLE (STRONGWELL)
(5) REMOVE EXTG VERIZON STRUCTURE & CONNECT TO 2 EXTG 4" PVC CONDUITS UNDER LRT
(6) CONNECT TO TWO EXTG 4" PVC (VZ) CONDUITS AND TO TWO EXISTING 2" PVC (COMCAST) CONDUITS
(7) NOT USED
(8) INSTALL BORE (ENTRY) PIT FOR 2-4" PVC AND 2-2" PVC
(9) NOT USED
(10) INSTALL 1- 4" PGE
(11) INSTALL 1- 3" PGE
(12) INSTALL 8- 4" VZ
(13) INSTALL 4- 4" VZ
(14) INSTALL 1- 4" VZ
(15) INSTALL 1- 2" COMCAST
(16) INSTALL 2- 2" COMCAST
(17) INSTALL 1- 2" NWNG (BY NWNG). COORDINATE W/ MARK SCHAEFER, NWNG, (503)226-4211 EXT 6938, DURING CONSTRUCTION
(18) INSTALL RECEIVING PIT
(19) INSTALL PGE 660 VAULT W/ 660-B-PGE BASE, 64-352P-PGE TOP AND 64-3667 ADJUSTABLE COVER SLAB. DOORS ARE SPRING ASSISTED, GALV. DIAMOND PLATE W/ LOCKING LATCH.
(20) INSTALL PGE 644 VAULT W/ 644-B-PGE BASE AND 64-332P-2125 PGE TOP. DOORS ARE SPRING ASSISTED, GALV. DIAMOND PLATE W/ LOCKING LATCH.
(21) INSTALL 6X6 PADMOUNT TRANSFORMER 7272-1242-TRANSPAD-PGE
(22) CONNECT TO EXTG 2-4" PVC & EXTEND TO CROSSING ARM FOUNDATION
(23) INSTALL 2- 4" VZ
(24) INSTALL PEDESTAL (BY COMCAST)
(25) INSTALL 1- 2" TRIMET
(26) INSTALL 1- 2" PGE
(27) INSTALL PGE JUNCTION BOX (17X30)
(28) CITY OWNED 4" HDPE UNDER LRT
(29) INSTALL PGE-577 VAULT WITH 577-B-PGE BASE & ADJUSTABLE TOP ASSY (57-AT-2-332P-PGE TOP & 57-T-3672 RISER)

0 20 40 80

SEE INSTALLATION SHEETS FOR SKETCHES SHOWING AS-BUILT LOCATIONS OF PRIVATE UTILITIES

AS-BUILT: CGOH & JEB
09-11-07 JEB

DRAFTED BY:	CG	DESIGNED BY:	JEB	REVIEWED BY:	TLW

REGISTERED PROFESSIONAL ENGINEER 15860PE OREGON APRIL 1, 1991 JAMES E. BRINK
EXPIRES: 12-31-07

SW ROSE BIGGI (SW MILLIKAN-SW CRESCENT)

WASHINGTON COUNTY

FEDERAL HIGHWAY ADMINISTRATION		PROJECT NUMBER	SHEET NO.
REGION 1	OREGON DIVISION	OREGON	13

MAP RECORD | AB #18134_1810
Project: CIP 3314 | QS: 3516
Date: 09/11/2007

Y:\Sdsk\3314-Henry-North\AS-BUILT\3314-henry-north-As-Built.dwg 09/17/2007 4:10:20 PM PDT

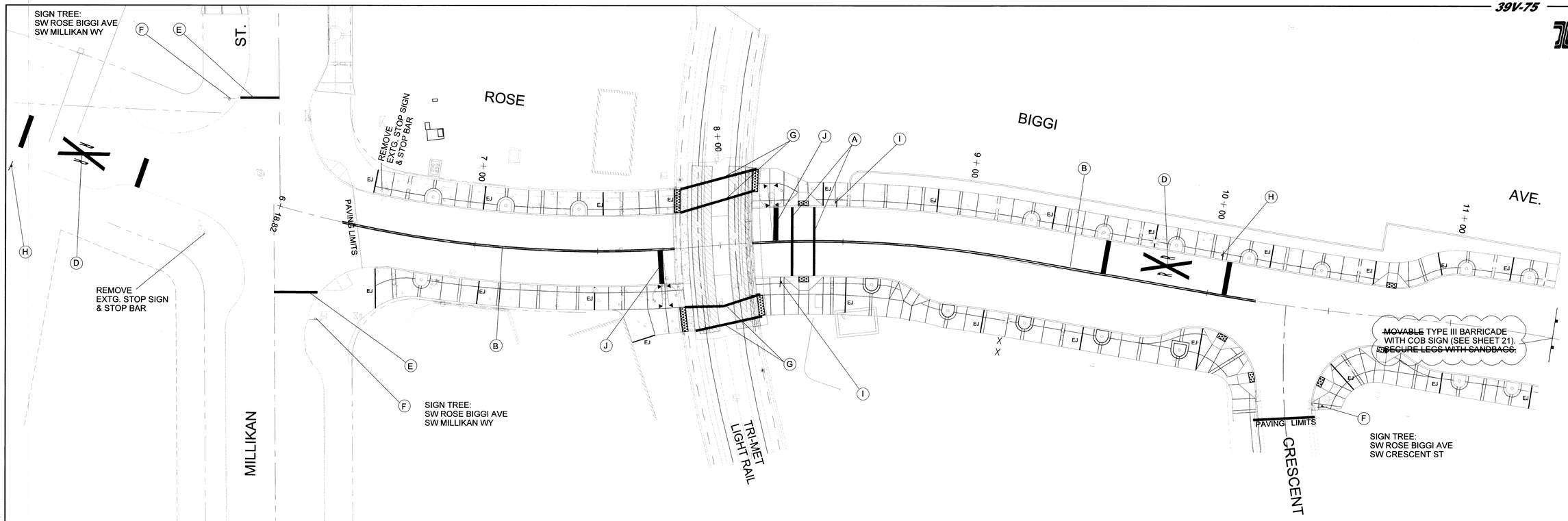

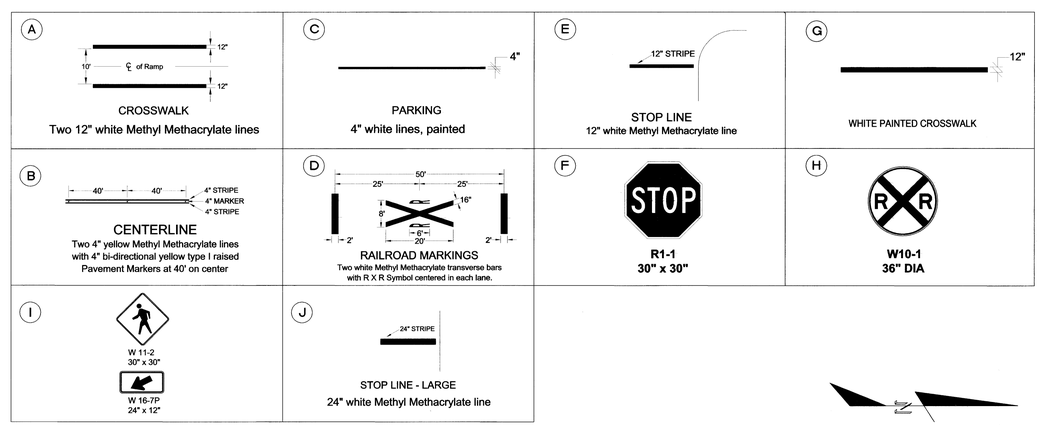

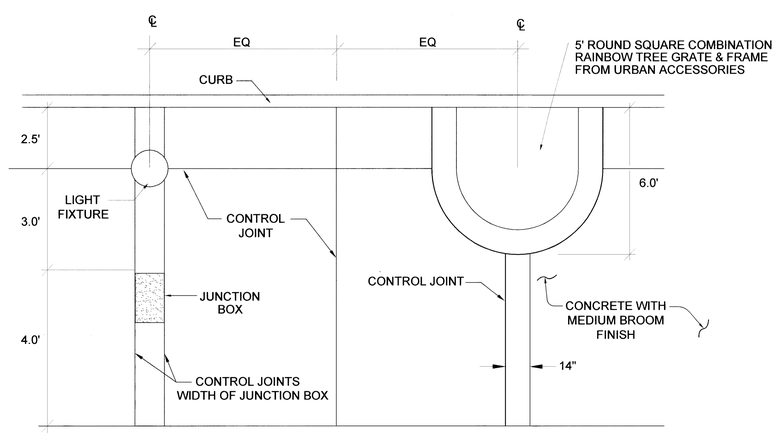

SIDEWALK TYPICAL LAYOUT

NOT TO SCALE

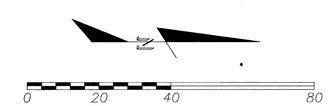

STREET SIGNAGE, STRIPING & CONCRETE SCORING

AS-BUILT: CGOA 09-11-07 JEB

DRAFTED BY:	CG	DESIGNED BY:	JEB	REVIEWED BY:	TLW

REGISTERED PROFESSIONAL ENGINEER
15860PE
OREGON
APRIL 1, 1994
JAMES E. BRINK
EXPIRES: 12-31-07

James E. Brink

SW ROSE BIGGI
(SW MILLIKAN-SW CRESCENT)
WASHINGTON COUNTY

FEDERAL HIGHWAY ADMINISTRATION		PROJECT NUMBER	SHEET NO.
REGION 1	OREGON DIVISION	OREGON MAP RECORD | AB #18135_1810 Project: CIP 3314 | QS: 3516 Date: 09/11/2007	14

Rose Biggi (Millikan-Crescent) | Street Imp.

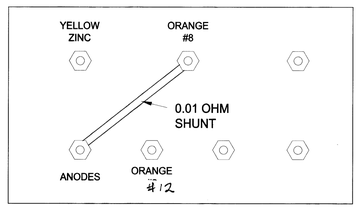

TYPICAL TEST STATION

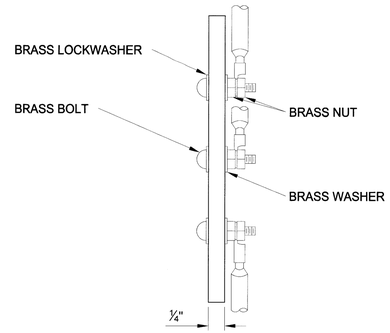

TYPICAL TERMINAL BOARD SECTION

TERMINAL BOARD WIRE DIAGRAM

NOT TO SCALE

1 / –

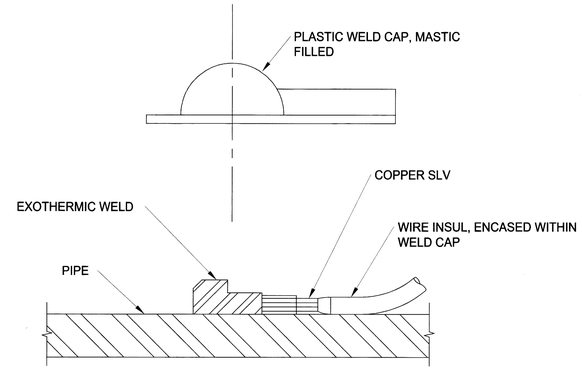

NOTES:

1. GRIND PIPE TO BRIGHT METAL BEFORE EXOTHERMIC WELDING.

2. APPLY WELD CAP DIRECTLY TO PIPE - NOT TO PIPE WRAP. USE PRIMER IF REQUIRED BY THE MANUFACTURER. COMPLETELY ENCIRCLE WIRE WITHIN MASTIC.

3. ON CONNECTIONS TO UNCOATED PIPE AND CASINGS, USE MASTIC FILLED PLASTIC WELD CAP ONLY; SECURE WITH PIPE TAPE.

PLASTIC WELD CAP

NOT TO SCALE

2 / –

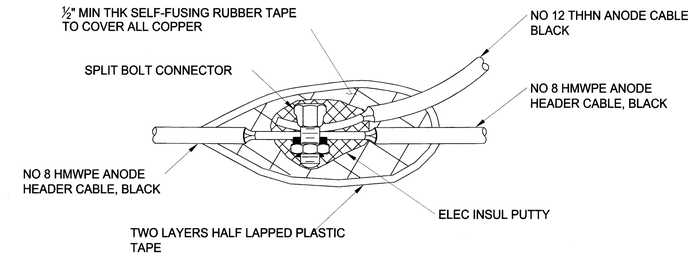

ANODE CABLE SPLICE

NOT TO SCALE

3 / –

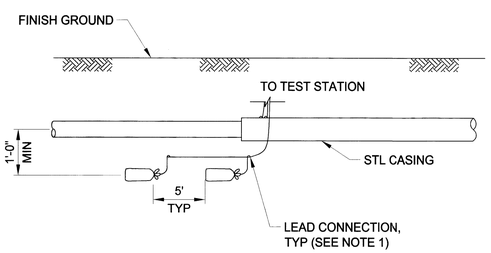

NOTES:

1. TWO ANODES ON EACH END OF CASING AS SHOWN. CONNECT ANODE (#12) LEAD TO HEADER CABLE (#8) USING A SPILT BOLT CONNECTOR (DO NOT CUT HEADER CABLE). INSTALL THREE WRAPS OF 3M HIGH VOLTAGE TAPE OVER THE CONNECTION, TWO WRAPS OF 3M VINYL TAPE, SEE DETAIL 3, THIS SHEET.

2. CASING ANODES TO HAVE SEPARATE HEADER CABLES.

3. PROVIDE SUFFICIENT SLACK IN TEST WIRES TO ALLOW TERMINAL BLOCK TO EXTEND 18-INCHES OUT OF TEST STATION. COIL WIRES IN TEST STATION.

4. INSTALL GALVANIC ANODE 1'-0" BELOW CASING INVERT ELEVATION.

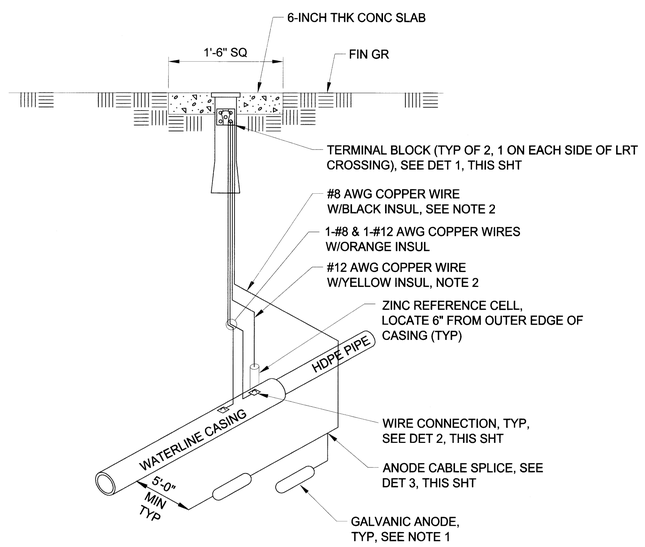

CASING HORIZONTAL GALVANIC ANODE INSTALLATION

NOT TO SCALE

4 / –

AS-BUILT: CGOM 09-11-07 JGB

DRAFTED BY:	CG	DESIGNED BY:	JSJ	REVIEWED BY:	TLW

REGISTERED PROFESSIONAL ENGINEER 18542 OREGON JULY 10, 1986 JEFFREY S. JONES

EXPIRES: 6-30-07

NOT TO SCALE

WATER SYSTEM MODIFICATION
CASING AND MISC. DETAILS

SW ROSE BIGGI
(SW MILLIKAN-SW CRESCENT)

WASHINGTON COUNTY

FEDERAL HIGHWAY ADMINISTRATION		PROJECT NUMBER	SHEET NO.
REGION 1	OREGON DIVISION	OREGON MAP RECORD | AB #18136_1810	15

Project: CIP 3314 | QS: 3516

Date: 09/11/2007

Rose Biggi (Millikan-Crescent) | Street Imp.

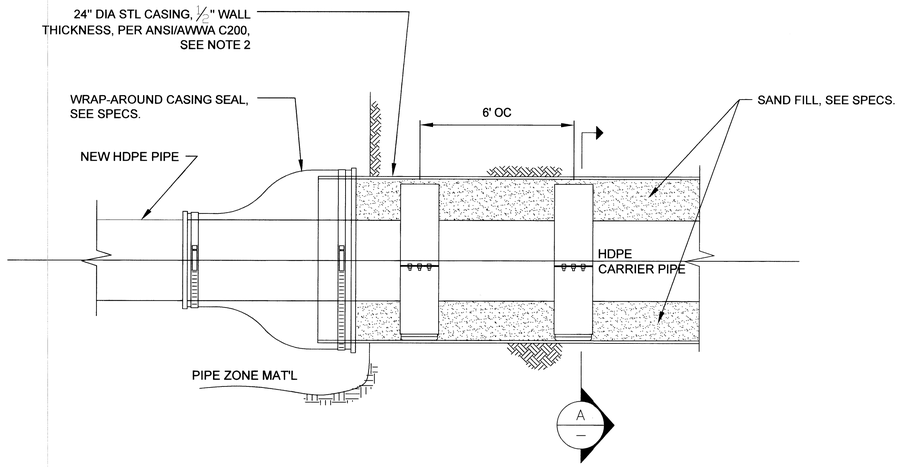

NOTES:

1. CONTRACTOR TO VERIFY CASING SIZE PRIOR TO ORDERING & SIZING CASING INSULATOR.
2. SEE SHEET 5 & 15 FOR CASING TEST STATION AND ANODE REQUIREMENTS.

WATERLINE CASING DETAIL (1 / –)
NOT TO SCALE

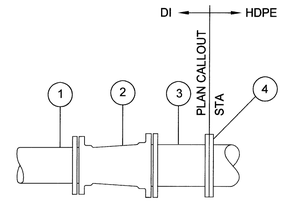

1. 12" CL 52 DI
2. 12"x14" RDCR, MJ
3. 14" FLGxPE SPL
4. 14" SDR 11 MOLDED HDPE FLG ADPTR W/150 LB DI BACKUP RING

DI TO HDPE TRANSITION (2 / –)
NOT TO SCALE

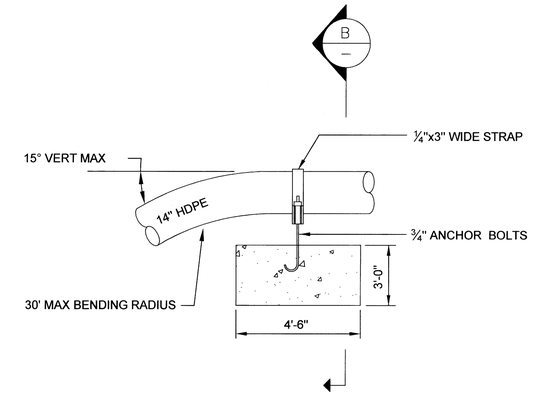

GRAVITY THRUST BLOCK (3 / –)
NOT TO SCALE

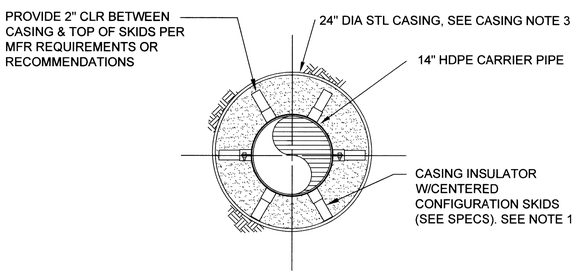

SECTION (A / –)
NOT TO SCALE

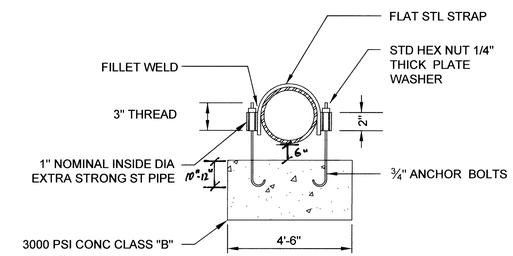

NOTE:

STANDARD 90° HOOK ON END OF ANCHOR BOLTS TO FACE CENTER OF BLOCKS.

SECTION (B / –)
NOT TO SCALE

WATER SYSTEM MODIFICATIONS
CASING AND MISC. DETAILS

REGISTERED PROFESSIONAL ENGINEER 18542 OREGON JULY 10, 1998 JEFFREY S. JONES
EXPIRES: 6-30-07

SW ROSE BIGGI (SW MILLIKAN-SW CRESCENT)
WASHINGTON COUNTY

FEDERAL HIGHWAY ADMINISTRATION		PROJECT NUMBER	SHEET NO.
REGION 1	OREGON DIVISION	OREGON MAP RECORD | AB #18137_1810	16

Project: CAP3314 | QS: 3516
Date: 09/11/2007

DRAFTED BY:	CG	DESIGNED BY:	JSJ	REVIEWED BY:	TLW

AS-BUILT: CGOA 09-11-07 JEB

Rose Biggi (Millikan-Crescent) | Street Imp.

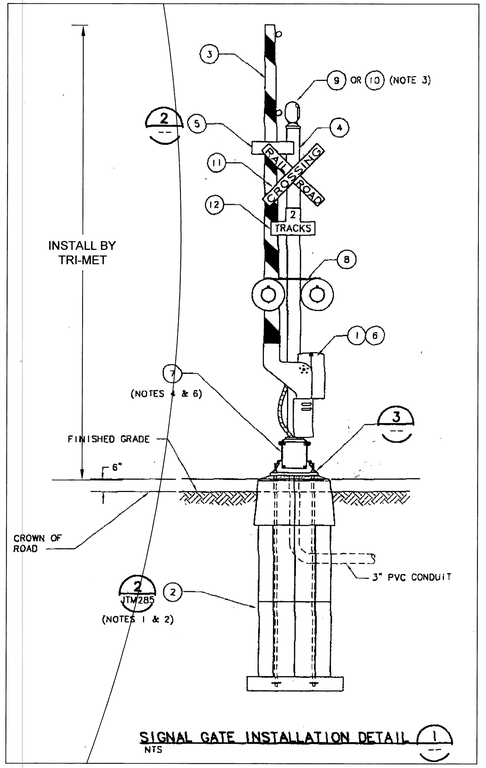

SIGNAL GATE INSTALLATION DETAIL (1)
NTS

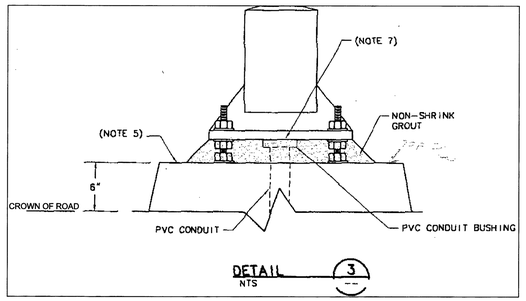

DETAIL (3)
NTS

NOTES:

1. FOUNDATIONS TO BE PLACED SQUARE WITH HIGHWAY REGARDLESS OF THE ANGLE OF THE CROSSING.
2. PLACEMENT OF THE CENTER OF THE FOUNDATIONS SHALL BE PER THE CONTRACT DRAWINGS.
3. THE FACE OF THE BELL SHALL BE PARALLEL WITH THE ROADWAY.
4. THE BASE SHALL BE ORIENTED WITH THE HAND HOLE COVER PLATE AWAY FROM THE TRACK.
5. TOP OF FOUNDATION TO BE 6" ABOVE CROWN OF ROAD.
6. GATE BASE SHALL BE LEVELED BY USING SHIMS.
7. DUCT SEAL CONDUIT AFTER CABLE INSTALLATION.
8. USE 5'-6" FOUNDATION.

BILL OF MATERIALS

ITEM	QTY	DESCRIPTION
1	1	GATE MECHANISM
2	1	PRECAST CONCRETE FOUNDATION
3	1	GATE ARM WITH LIGHTS
4	1	5" ALUMINUM PIPE MAST
5	1	HIGH WIND BRACKET
6	2	SAFETRAN SCREW TYPE PADLOCK
7	1	JUNCTION BOX BASE
8	AS REQ.	FLASHING LIGHT ASSEMBLY
9	1	PINNACLE
10	1	GRADE CROSSING PEDESTRIAN BELL
11	AS REQ.	RAILROAD CROSSING SIGN
12	AS REQ.	NUMBER OF TRACKS SIGN

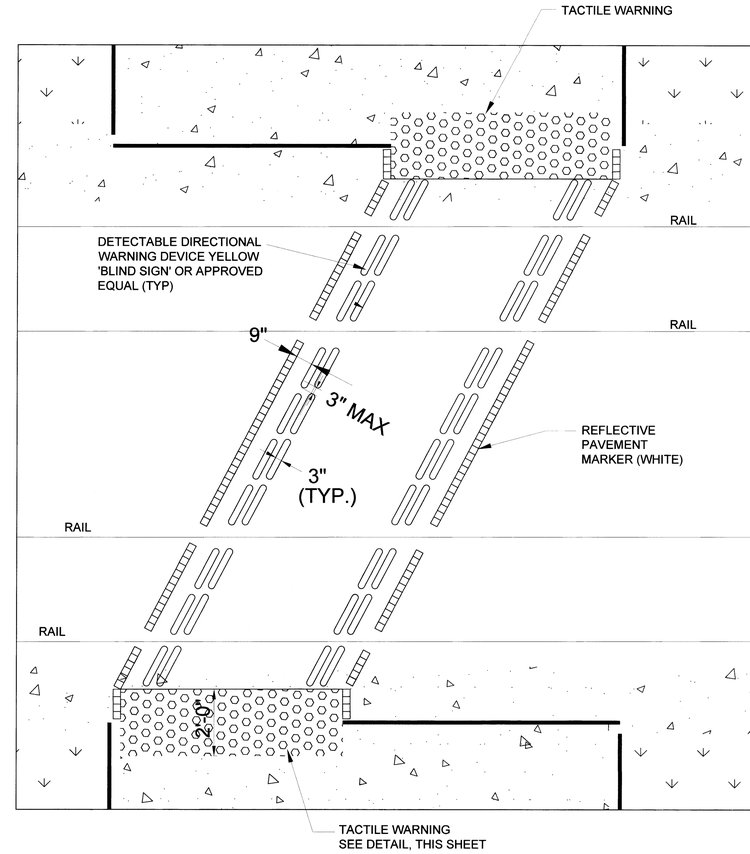

BLIND SIGN STRIP DIMENSION DETAIL
NTS

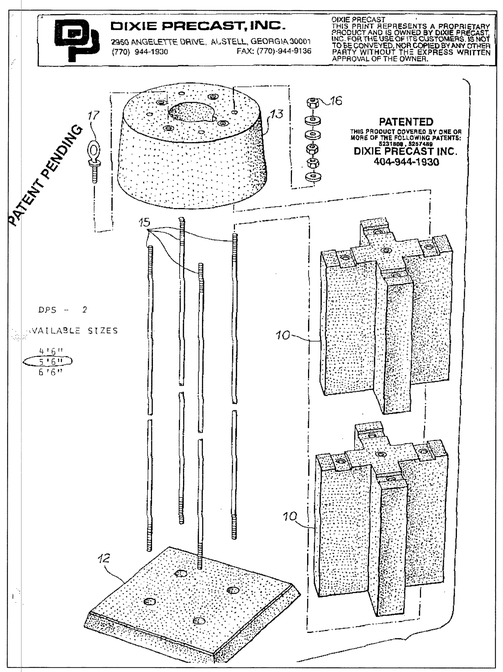

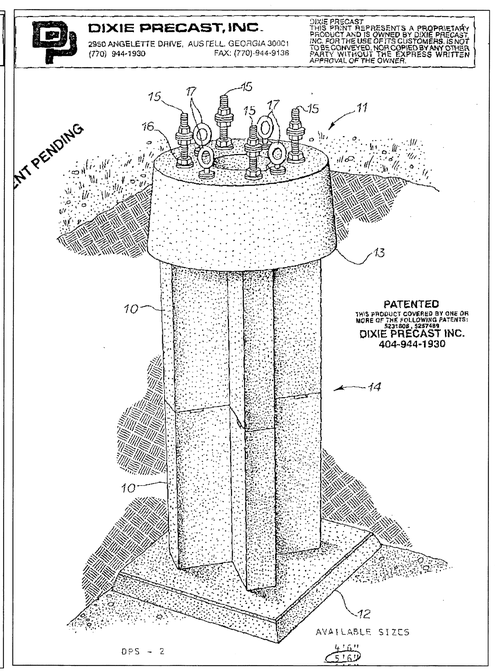

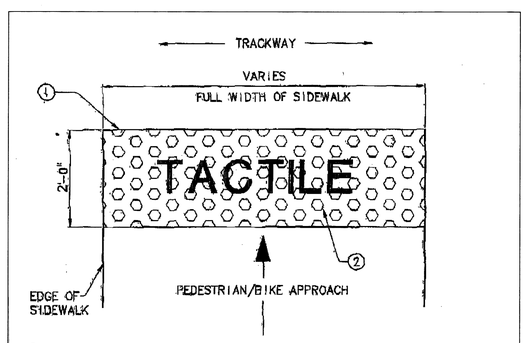

1. DETECTABLE WARNING SURFACE, APPROVED BY TRIMET, AS REQUIRED BY 49 CFR, PART 37, APPENDIX A, PARAGRAPH 4.29.5.
2. COLOR SHALL CONTRAST ADJACENT SURFACES, AS REQUIRED BY 49 CFR, PART 37, APP. A PARA. 4.29.2 & ADAAG APPENDIX R.
3. COORDINATE WITH JURISDICTION FOR APPLICATION IN JURISDICTION RIGHT-OF-WAY.

TRI-MET	CAPITAL PROJECTS AND FACILITIES DIVISION, 710 N.E. HOLLADAY STREET, PORTLAND, OREGON 97232	STANDARD DETAIL PEDESTRIAN TACTILE WARNING	
DRAWN: BAL	DESIGN: DI / CHECKED: DI	APPROVED: DI	DATE: 10/21/99
SCALE: 1/2" = 1'-0"	FILE NAME: STD-10	CONTRACT NO:	SHEET NO: 15,003C

NOT TO SCALE

TRI-MET SIGNAL ARM AND BASE DETAIL

AS-BUILT: CGM 09-11-07 JEB

DRAFTED BY:	CG	DESIGNED BY:	JEB	REVIEWED BY:	TLW

REGISTERED PROFESSIONAL ENGINEER 15860PE OREGON APRIL 1, 1993 JAMES E. BRINK
EXPIRES: 12-31-07

SW ROSE BIGGI (SW MILLIKAN-SW CRESCENT)
WASHINGTON COUNTY

FEDERAL HIGHWAY ADMINISTRATION		PROJECT NUMBER	SHEET NO.
REGION 1	OREGON DIVISION	OREGON	17

MAP RECORD | AB #18139_1810
Project: CIP 3314 | QS: 3516
Date: 09/11/2007

CONCRETE CATCH BASIN STORMFILTER
ONE-CARTRIDGE UNIT
SPECIFICATIONS

PART 1 GENERAL

1.1 SECTION INCLUDES

Catch Basin StormFilter

1.2 RELATED SECTIONS

Section [ ]:

1.3 SUBMITTALS

A. Stormwater360 (S360) to submit shop drawing to contractor for approval.

B. Stormwater360 to submit Operation and Maintenance Manual to contractor if requested.

PART 2 PRODUCTS

2.1 INTERNAL COMPONENTS

A. All internal components including PVC piping, filter cartridge(s) and filter media (as specified in the StormFilter data block) shall be provided by STORMWATER360, 2035 NE Columbia Blvd., Portland, OR 97211 (800/548-4667).

B. PVC Piping: All internal PVC piping and fittings shall meet ASTM D1785.

C. Filter Cartridge:

1. Cartridge bottom pan, inner ring, and hood shall be constructed from linear low-density polyethylene. Cartridge screen shall consist of galvanized 1" x 1/2" welded wire fabric (16 gauge minimum) with a bonded PVC coating. Internal parts shall consist of PVC or ABS pipe and fittings. Siphon-priming float shall be constructed from linear low-density polyethylene. Outer filter fabric shall be 10 x 8.5 clear fiberglass mesh. Inner filter fabric shall be 10 x 8.5 clear fiberglass mesh over Enkamat 7210 or woven polyethylene with a US Standard Sieve #20 opening size. All miscellaneous screws, nuts, and fasteners shall be aluminum or stainless steel.

2. An orifice plate shall be supplied with each cartridge to restrict flow rate to 15 gpm maximum.

D. Filter Media: Filter media shall be by STORMWATER360 or approved alternate. Filter media shall consist of one or more of the following, as specified in the StormFilter data block:

1. Perlite Media: Perlite media shall be made of natural siliceous volcanic rock free of any debris or foreign matter. The expanded perlite shall have a bulk density ranging from 6.5 to 8.5 lb/ft3 and particle sizes ranging from 0.06 to 0.50 inches.

2. CSF Leaf Media: CSF Leaf media shall be made exclusively of fallen deciduous leaves with less than 5% by dry weight of woody or green yard debris materials. Filter media shall be granular and shall contain less than 0.5% foreign material such as glass or plastic contaminants. Media shall be dry at the time of installation.

The CSF Leaf media shall have a bulk density ranging from 40 to 50 lb/ft3 and particle sizes ranging from 0.05 to 0.50 inches. Maximum level of dust for filter media shall be defined as: media passing through a US Standard Sieve #4 shall have no more than 10% (by mass of dry media) passing a US Standard Sieve #45.

3. Zeolite Media: Zeolite media shall be made of naturally occurring clinoptilolite, which has a geological structure of potassium-calcium-sodium aluminosilicate.

The zeolite media shall have a bulk density ranging from 44 to 50 lb/ft3, particle sizes ranging from 0.125 to 0.25 inches, and a cation exchange capacity ranging from 1.0 to 2.2 meq/g.

4. Iron-Infused Media: Iron-infused media shall be made from phenolic resin mixed with iron particles and polymerized to form open cellular foam. The stock materials must be free of debris with the iron particles being non-reactive and non-greased.

The iron-infused media shall have a bulk density ranging from 20 to 30 lb/ft3 and particles sizes ranging from 0.0 to 0.5 inches.

5. Pleated Fabric Insert: Pleated fabric insert shall be constructed with a minimum of 75 sq-ft of fabric placed between two aluminum end caps with neoprene gaskets. The overall dimensions of the insert shall be 16.0" O.D. x 11.5" I.D. x 18.25" tall. The fabric shall meet the following specifications: 140 pleats measuring 2.125" x 18.25"; 100% 3D PE/PET bicomponent fiber; thickness of 19 mils; Mullen Burst of 96 psi; and Coulter Porometer of 70 micron.

2.2 CONCRETE CATCH BASIN COMPONENTS

A. Concrete Catch Basin: Catch basin shall be pre-cast concrete construction, with reinforcing steel and mesh. Wall thickenesses shall be approximately 3-inches (exact dimensions to be shown on shop drawings). Strength shall be adequate to support standard H-20 traffic loading. All external fastenings and components shall be made of non-corrosive material. Concrete shall have a 28-day strength of 4,500 psi. Reinforcing bar shall be grade 60 and shall meet ASTM A-615. Reinforcing mesh shall be grade 65 and shall meet ASTM A-185

B. Catch Basin Grate and Frame: Grating shall consist of two welded steel bar grates with capacity for H-20 traffic loading. Bar dimensions and spacing shall be according to Oregon Department of Transportation (ODOT) Drawing #RD336. Grate and dimensions shall be according to this ODOT drawing except narrowed as shown on the SMI detail.

C. Catch Basin Manhole-type Lid: The lid over the cartridge chamber shall be a standard 24-inch cast-iron manhole lid with two lift holes. The support ring shall be cast into a separate slab as shown on the SMI detail.

2.3 CONTRACTOR-PROVIDED COMPONENTS

A. Sub-Base: Shall be 6-inch minimum of 3/4-inch minus rock or as otherwise specified in the general technical specifications.

B. Backfill: Shall be 3/4-inch minus rock or as otherwise specified in the general technical specifications.

PART 3 EXECUTION

3.1 CONCRETE CATCH BASIN

A. Catch basin floor shall be set level and plumb.

B. Contractor shall prevent sediment and debris from entering the filter unit during construction.

C. Contractor shall compact sub-base to 95% of maximum density or as otherwise specified by engineer. Unsuitable material below sub-grade shall be replaced as directed by engineer.

D. If necessary, the inlet chamber may be filled with clean water to assist in preventing flotation during construction until the structure is backfilled.

E. Contractor shall compact backfill to 95% of maximum density or as otherwise specified by engineer.

F. Outlet (downstream) pipe (or an appropriate fitting) shall be grouted into the hole that is provided for the outlet. The grout shall form a water-tight connection.

G. If an inlet (upstream) pipe is required, the inlet pipe (or an appropriate fitting) shall be grouted into the hole that is provided for the inlet. The grout shall form a water-tight connection.

3.2 FILTER CARTRIDGE

Catch Basin StormFilter shall be provided complete with cartridge(s) and cartridge media installed.

3.3 CLEANUP

A. The project site shall be clean and free of dirt and debris before runoff is allowed to enter the filter. Site work shall be in a complete condition as approved by the engineer. The project site includes any surface that contributes storm drainage to the system.

B. The inlet/outlet chamber and filter chamber(s) shall be free of construction debris and sediment before the system is placed in operation.

C. Contractor shall remove the 4-inch temporary construction plug(s) between the inlet chamber and filter chamber(s) to place the system in operation.

D. The cleanout plug (generally a 4-inch expansion plug) in the overflow weir wall shall remain in place for proper operation of the system.

END OF SECTION

OPTIONS (AVAILABLE AT EXTRA COST):

- ☐ HOLE FOR OUTLET STUB OTHER THAN 12"
- ☐ CLEAN-OUT IN WEIR OTHER THAN 4"
- ☐ CORED HOLE FOR INLET PIPE
- ☐ OTHER:

* Outlet pipe IE is 33 to 35 inches (2.75 to 2.9 feet) below the rim. Deeper outlet holes provided at extra cost.

GENERAL NOTES:

1.) STORMFILTER BY STORMWATER360, PORTLAND, OREGON (800/548-4667).
2.) CATCH BASIN MUST BE SET LEVEL.
3.) EXTERNAL PIPING AND COUPLINGS TO BE PROVIDED BY OTHERS.
4.) INLET AND OUTLET PIPES TO BE GROUTED INTO HOLES PROVIDED. JOINTS TO BE WATER-TIGHT.
5.) STORMFILTER REQUIRES REGULAR MAINTENANCE. REFER TO OPERATION AND MAINTENANCE MANUAL FOR DETAILS.
6.) CATCH BASIN STORMFILTER STRUCTURAL SPECIFICATIONS:

LOAD RATING:	H-20 (20,800 LB.)
CONSTRUCTION:	4,500 PSI REINFORCED CONCRETE
EXPOSED COMPONENTS:	PLASTIC AND OTHER NON-CORROSIVE MATERIALS (EXCEPT LID AND GRATE)
CARTRIDGE ACCESS LID:	CAST-IRON MANHOLE LID
GRATE:	WELDED STEEL - OREGON DOT TYPE 2 (NARROWED)
BASE WEIGHT:	2,240 LB.
TOP WEIGHT:	860 LB

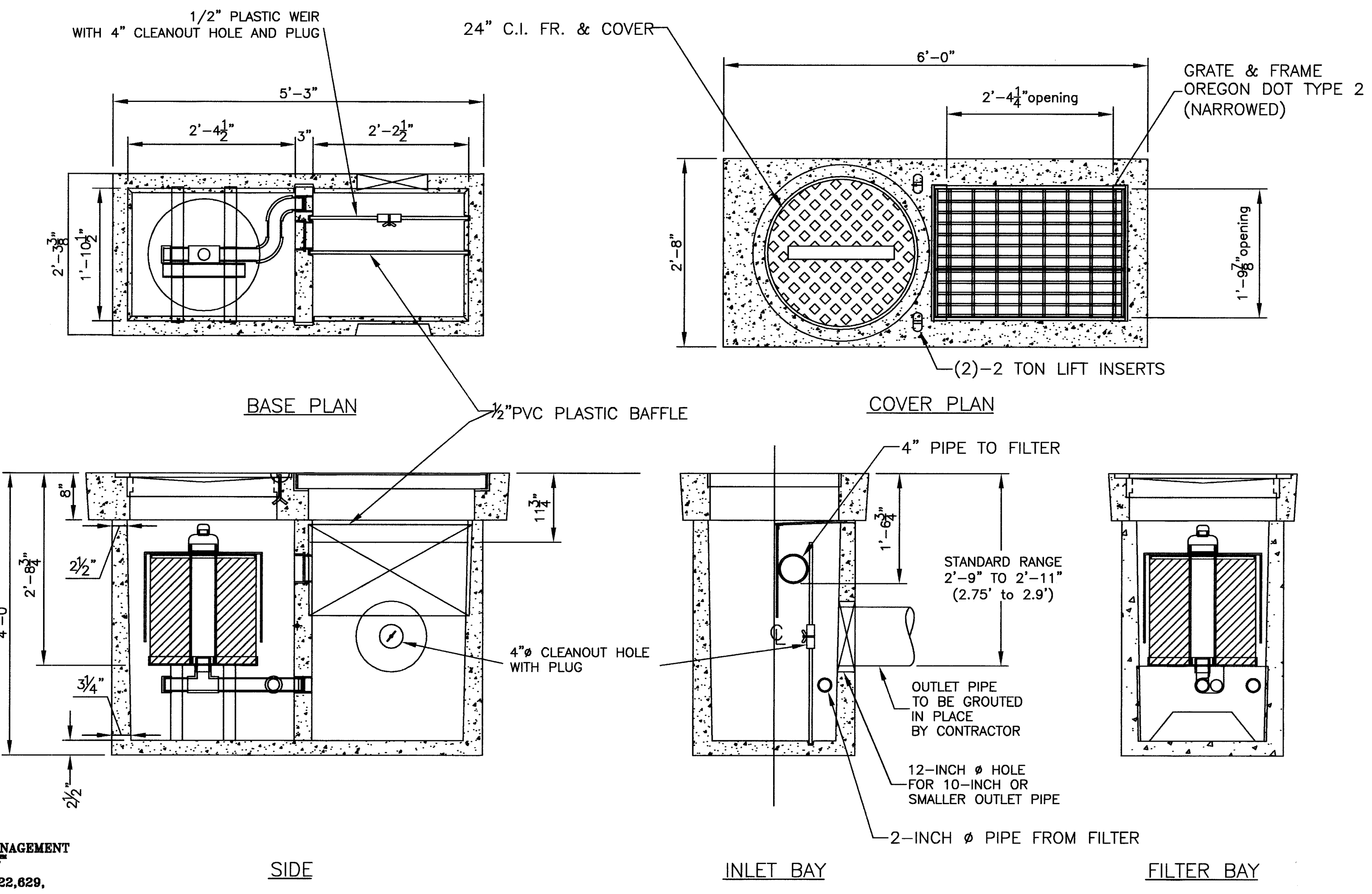

The STORMWATER MANAGEMENT
StormFilter™
U.S. PATENT No. 5,322,629, No. 5,707,527, No. 6,027,639, No. 5,624,576, AND OTHER U.S. AND FOREIGN PATENTS PENDING

Stormwater360 A CONTECH Company www.stormwater360.com

CONCRETE CATCH BASIN STORMFILTER ONE-CARTRIDGE UNIT STANDARD DETAIL

DRAWING FILE NAME: CBSF-1-C.dwg | PROJECT NO. 2001 | SCALE: N.T.S.

DESIGNED BY: BOW | DRAWN BY: LGS | CHECKED BY: | APPROVED BY: | CHECK DATE: | APPR. DATE: | DATE | BY | REVISION | CK'D | APPR.

SHEET 1/3 | 1 | PLOT DATE: 8/3/2001 | LAST EDIT: LGS

©2005 Stormwater360

DATA BLOCK
ONE-CARTRIDGE CONCRETE/STEEL CATCH BASIN STORMFILTER

STRUCTURE CALLOUT ID		CB1 (DEEP STEEL)	
WATER QUALITY FLOW (CFS)		0.01	
CONVEYANCE FLOW (CFS)		0.32	
RETURN PERIOD OF PEAK FLOW		25 YRS	
MEDIA TYPE		PERLITE	
RIM ELEVATION		~~179.01~~ 178.71	
	PIPE I.E. *	PIPE MATERIAL	PIPE DIAMETER
INLET PIPE	NA		
OUTLET PIPE	~~176.26~~ 175.85	PVC 3034	10"

CONFIGURATION:

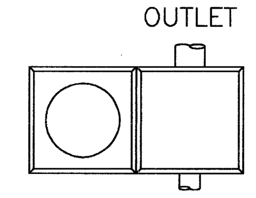

MIRROR IMAGE CONFIGURATION NOT AVAILABLE IN CONCRETE

Pipe stubs are for illustration only. Pipes to be grouted into hole(s) provided

STRUCTURE CALLOUT ID		CB4 (CONCRETE)	
WATER QUALITY FLOW (CFS)		0.01	
CONVEYANCE FLOW (CFS)		0.426	
RETURN PERIOD OF PEAK FLOW		25 YRS	
MEDIA TYPE		PERLITE	
RIM ELEVATION		~~180.12~~ 179.90	
	PIPE I.E. *	PIPE MATERIAL	PIPE DIAMETER
INLET PIPE	NA		
OUTLET PIPE	~~177.37~~ 177.14	PVC 3034	10"

STRUCTURE CALLOUT ID		CB2 (CONCRETE)	
WATER QUALITY FLOW (CFS)		0.01	
CONVEYANCE FLOW (CFS)		0.21	
RETURN PERIOD OF PEAK FLOW		25 YRS	
MEDIA TYPE		PERLITE	
RIM ELEVATION		~~178.9~~ 178.84	
	PIPE I.E. *	PIPE MATERIAL	PIPE DIAMETER
INLET PIPE	NA		
OUTLET PIPE	~~176.15~~ 175.94	PVC 3034	10"

STRUCTURE CALLOUT ID		CB3 (CONCRETE)	
WATER QUALITY FLOW (CFS)		0.02	
CONVEYANCE FLOW (CFS)		0.64	
RETURN PERIOD OF PEAK FLOW		25 YRS	
MEDIA TYPE		PERLITE	
RIM ELEVATION		~~180.07~~ 180.0	
	PIPE I.E. *	PIPE MATERIAL	PIPE DIAMETER
INLET PIPE	NA		
OUTLET PIPE	~~177.32~~ 177.10	PVC 3034	10"

AS-BUILT: CGOH 09-11-07

REGISTERED PROFESSIONAL ENGINEER 15860PE OREGON APRIL 1, 1991 JAMES E. BRINK

EXPIRES: 12-31-07

STORMFILTER CATCH BASIN DETAIL

SW ROSE BIGGI (SW MILLIKAN-SW CRESCENT)

WASHINGTON COUNTY

FEDERAL HIGHWAY ADMINISTRATION		PROJECT NUMBER	SHEET NO.
REGION 1	OREGON DIVISION	OREGON	18

MAP RECORD | AB #18138_1810
Project: CIP 3314 | QS: 3516
Date: 09/11/2007

Rose Biggi (Millikan-Crescent) | Street Imp.

Y:\Sdsk\3314-Henry-North\CONST-DETAILS.dwg 05/23/2006 9:03:49 AM PDT

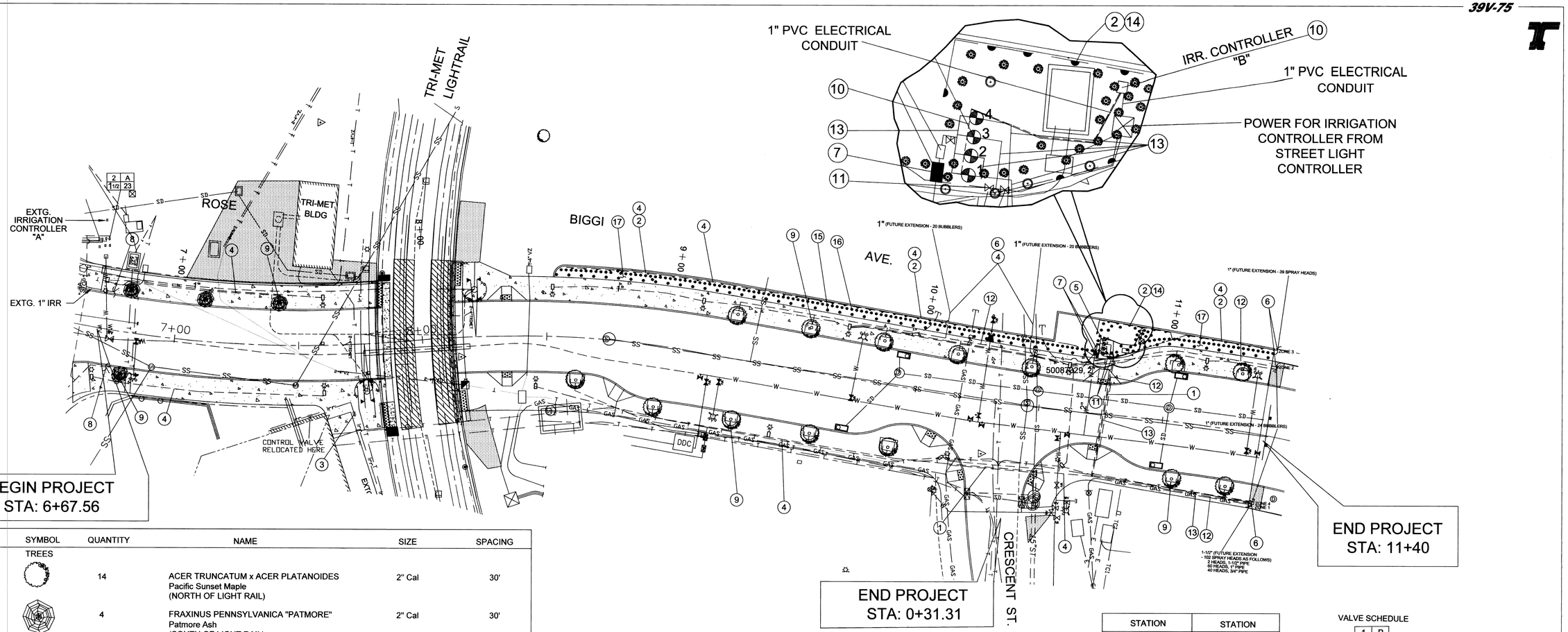

SYMBOL	QUANTITY	NAME	SIZE	SPACING
TREES				
	14	ACER TRUNCATUM x ACER PLATANOIDES Pacific Sunset Maple (NORTH OF LIGHT RAIL)	2" Cal	30'
	4	FRAXINUS PENNSYLVANICA "PATMORE" Patmore Ash (SOUTH OF LIGHT RAIL)	2" Cal	30'
SHRUBS				
	~~194~~ 58	LIGUSTRUM JAPONICUM "SUWANNEE RIVER" Suwannee River Japanese Privet	2 Gal.	5' O.C.
GROUND COVER				
	~~285~~ 154	VINCA MAJOR Periwinkle	1 Gal.	24" O.C.

NOTES:

1. PLACE IRRIGATION PIPE IN 6" PVC SCHEDULE 40 SLEEVE THAT EXTENDS 6" BEYOND CURB. SEE DETAIL SHT 20.
2. INSTALL INSTALL POP-UP SPRINKLER HEAD, RAINBIRD 1806-PRS, 5' RADIUS AND 5' SPACING.
3. RELOCATE EXTG IRRIG. CONTROL VALVE & BOX OUTSIDE OF NEW CONCRETE SIDEWALK.
4. INSTALL 1" PVC SCHEDULE 40 IRRIGATION PIPE.
5. INSTALL REMOTE CONTROL VALVE, RAINBIRD 150-PEB-PRS-D, AND VALVE BOX. CONNECT REMOTE CONTROL VALVE TO IRRIGATION CONTROLLER.
6. CAP IRRIGATION LINES (FOR FUTURE EXTENSION).
7. POINT OF CONNECTION: 2" WATER METER, DOUBLE CHECK BACKFLOW, CONTROL VALVES 1-4, AND IRRIGATION CONTROLLER "B". SEE DETAIL ABOVE.
   - INSTALL CITY PROVIDED 2" WATER METER. PROVIDE CITY 7 DAYS NOTICE FOR WHEN METER IS NEEDED.
   - INSTALL DOUBLE CHECK BACKFLOW ASSY, FEBCO 805Y. REQUIRES PLUMBING PERMIT AND TESTING.
   - INSTALL QUICK COUPLING VALVE, RAINBIRD 33DRC.
   - INSTALL MANUAL DRAIN VALVE
8. CONNECT TO EXISTING 1" IRRIGATION PIPE.
9. INSTALL IRRIGATION BUBBLER SYSTEM SEE TREEWELL DETAILS SHT 20.
10. INSTALL AUTOMATIC CONTROLLER "B", RAINBIRD ESP-MC-8, WITH PEDESTAL, ~~RAINBIRD PED-DD16.~~ ESP-MC-55 WIRE AUTOMATIC CONTROLLER TO REMOTE CONTROL VALVES.
    INSTALLATION OF WIRING FROM STREET LIGHT CONTROLLER TO IRRIGATION CONTROLLER REQUIRES AN ELECTRICAL PERMIT FROM CITY BUILDING DEPT.
11. INSTALL BALL VALVE, RAINBIRD BV SERIES.
12. INSTALL 1-1/4" PVC SCHEDULE 40 IRRIGATION PIPE.
13. INSTALL 1-1/2" PVC SCHEDULE 40 IRRIGATION PIPE.
14. INSTALL 3/4" PVC SCHEDULE 40 IRRIGATION PIPE.
15. PLANT SUWANNEE RIVER JAPANESE PRIVET SHRUBS. (SEE DETAIL SHT. 20)
16. PLANT VINCA MAJOR (SEE DETAIL SHT. 20)
17. MULCH PLANTING BED WITH 3" MEDIUM GRIND BARK

IRRIGATION LEGEND

IRRIGATION PIPE, PVC SCHEDULE 40, 1-1/2", 1-1/4", 1", AND 3/4" AS SHOWN ON THE PLANS.

SCHEDULE 40 PVC SLEEVES, 6"

REMOTE CONTROL VALVE, RAINBIRD 150-PEB-PRS-D, 1 1/2"

HEAD KEY

SPRAY HEAD — RAINBIRD 1806-PRS-FULL, 3/4 & PART CIRCLE-6"H 5' RADIUS, 30 PSI, POP-UP BODY WITH 5 SERIES MPR NOZZLE.

BUBBLER — BUBBLER ASSEMBLY W/ TWO (2) RAINBIRD NOZZLES (MODEL 1402, FULL CIRCLE, TRICKLE PATTERN)

VALVE KEY

4	A
1½	36.3

4 — CONTROLLER
1½ — GPM
VALVE SIZE
A — STATION CIRCUIT

STATION	STATION
6+80.27, 17.0 LT	6+80.50, 17.00 RT
7+11.16, 17.00 LT	~~8+66.36, 17.00 RT~~ 8+62.36, 17.00 RT
7+42.08, 17.00 LT	~~8+95.27, 17.00 RT~~ 8+95.93, 25.00 RT
9+24.32, 17.00 LT	~~9+24.39, 18.82 RT~~ 9+28.94, 25.00 RT
9+54.32, 17.00 LT	~~9+54.36, 18.02 RT~~ 9+60.97, 25.00 RT
9+84.32, 17.00 LT	~~9+84.33, 15.02 RT~~ 9+93.24, 25.00 RT
10+14.53, 17.00 LT	~~11+04.28, 22.20 RT~~ 11+06.57 23.00 RT
10+45.19, 16.11 LT	~~11+30, 22.35 RT~~ 11+26.99, 23.00 RT
11+02.07, 23.00 LT	
11+28.85, 23.00 LT	

TREEWELL LOCATION

VALVE SCHEDULE

1	B
1½	34

2	B
1½	31

3	B
1½	22

4	B
1½	29

0 20 40 80

AS-BUILT

THESE AS-BUILT PLANS WERE COMPILED FROM SURVEY DATA. DATA COLLECTED FROM OTHERS, AND OBSERVATION DURING CONSTRUCTION. IT IS SUGGESTED THAT THESE PLANS BE USED IN CONJUNCTION WITH FIELD VERIFICATION OF LOCATION AND ELEVATION OF IMPROVEMENTS IN QUESTION. THE CITY OF BEAVERTON ASSUMES NO RESPONSIBILITY, OR LIABILITY, FOR ANY ERRORS, OMISSIONS, OR USE OF THIS INFORMATION.

SIGNATURE James E. Brink

DATE 9-11-2007

AS-BUILT: CGOH & JED 09-11-07 JEB

REGISTERED PROFESSIONAL ENGINEER 15860PE OREGON APRIL 1, 1997 JAMES E. BRINK

EXPIRES: 12-31-06

SW ROSE BIGGI (SW MILLIKAN-SW CRESCENT)

WASHINGTON COUNTY

FEDERAL HIGHWAY ADMINISTRATION		PROJECT NUMBER	SHEET NO.
REGION 1	OREGON DIVISION	OREGON MAP RECORD | AB #18140_1810	19

Project: CIP 3314 | QS: 3516
Date: 09/11/2007

DRAFTED BY:	CG	DESIGNED BY:	JEB	REVIEWED BY:	TLW

Rose Biggi (Millikan-Crescent) | Street Imp.

Y:\Sask\3314-Henry-North\AS-BUILT\3314-henry-north-As-Built.dwg 09/17/2007 4:10:20 PM PDT

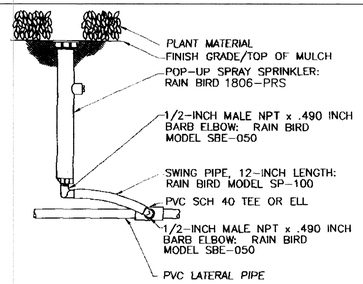

POP-UP SPRAY SPRINKLER
NOT TO SCALE

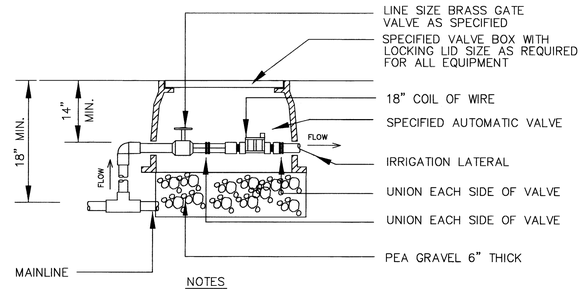

NOTES
1. CLEAN OUT ALL SOIL TO BOTTOM OF VALVE.
2. USE VALVE BOX EXTENSIONS AS REQUIRED.

REMOTE CONTROL VALVE
NOT TO SCALE

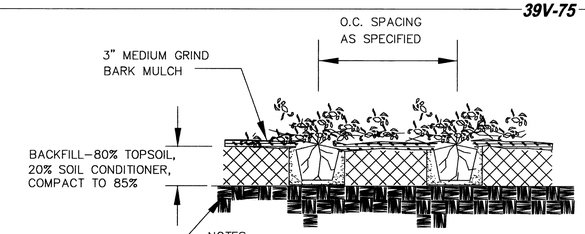

NOTES:
1. DIG PLANTING HOLE SLIGHTLY LARGER THAN ROOT MASS
2. LOOSEN SIDES OF ROOT MASS BEFORE PLANTING BY SCRAPING WITH KNIFE OR STICK
3. BACKFILL WITH TOPSOIL TAKEN FROM HOLE AND LIGHTLY HAND PACK

GROUNDCOVERS

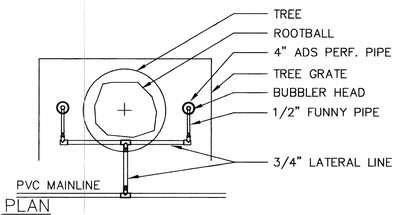

PLAN

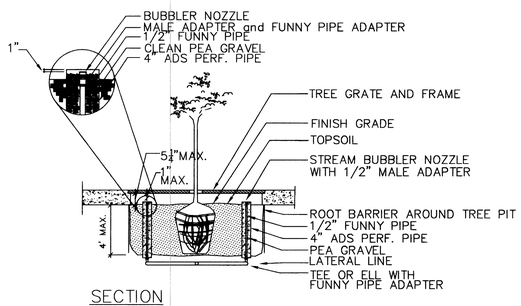

SECTION

IRRIGATION IN TREE PITS
NOT TO SCALE

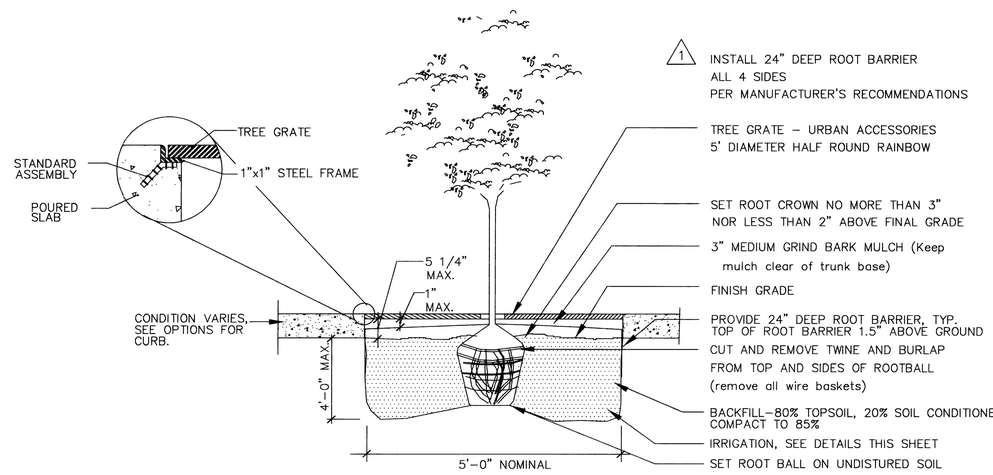

DECIDUOUS TREE PLANTING IN TREE GRATE PIT

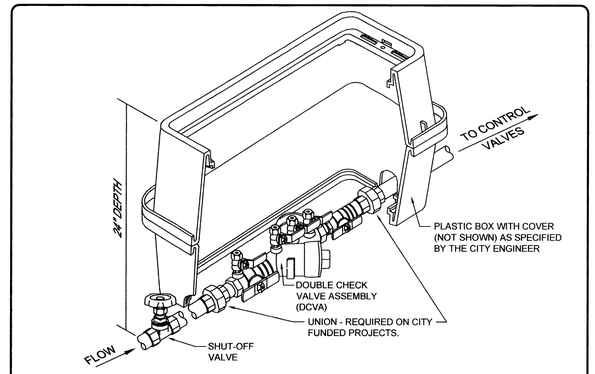

INSTALLATION REQUIREMENTS:

1. When required, backflow prevention assemblies for the protection of the public water system shall meet the requirements set forth in the current Oregon Administrative Rules Chapter 333-061-0070, Uniform Plumbing Code, and City of Beaverton Code 4.02.160 and 4.02.165. Contact the cross-connection inspector, in the *City of Beaverton Engineering Department,* for current requirements.
2. All boxes located in driveways and sidewalks shall have approved traffic-rated covers.
3. Double Check Valve Assemblies (DCVA's) up to and including 1-inch shall be installed in Pacific Water Works meter box MBE #66. The DCVA shall be readily accessible with adequate space for testing and maintenance. DCVA's larger than 1-inch and up to 2-inches shall be installed in an approved size box, with at least 6-inches of clearance on both sides and under the DCVA. DCVA's larger than 2-inches shall be installed in an approved vault. Contact the cross-connection inspector, by calling the *City of Beaverton Engineering Department,* for proper sizing.
4. When the DCVA is installed below ground, the test ports **MUST NOT** be facing downward. The test ports must be plugged with threaded plugs. No dissimilar metals for plugs.
5. The DCVA shall be installed at a depth of 24-inches below ground; plumbing code requires 24-inches, allowing for freeze protection.
6. The DCVA shall be tested by a State certified tester following installation and annually thereafter, and when moved or repaired .
7. Oregon Administrative Rules require installation of a DCVA at the service connection where an approved air gap does not exist.
8. A plumbing permit is required to install an irrigation sprinkler system.
9. Upon completion of installation, the City of Beaverton shall be notified within 24 hours for City personnel to inspect the installation.
10. This is to be a private facility, governed by *UPC* and *Oregon Dept. of Human Services,* as applicable.

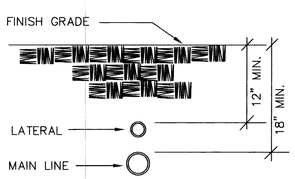

DEPTH OF IRRIGATION PIPES
NOT TO SCALE

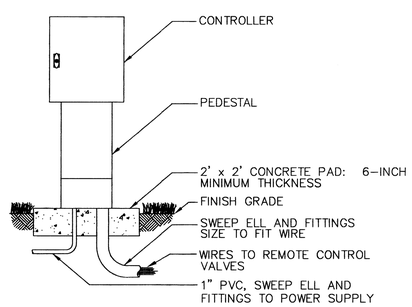

PEDESTAL IRRIGATION CONTROLLER
NOT TO SCALE

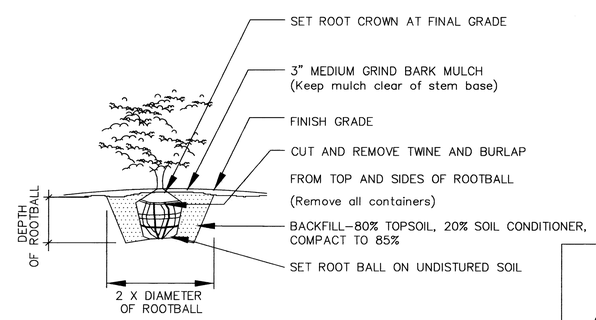

SHRUB PLANTING

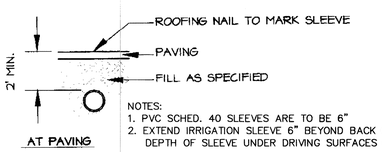

NOTES:
1. PVC SCHED. 40 SLEEVES ARE TO BE 6"
2. EXTEND IRRIGATION SLEEVE 6" BEYOND BACK OF CURB DEPTH OF SLEEVE UNDER DRIVING SURFACES = 24" MIN.

IRRIGATION SLEEVES
NOT TO SCALE

1 REVISED JULY 6, 2006

City Of Beaverton

ENGINEERING DEPARTMENT		PRIVATE DOUBLE CHECK VALVE ASSEMBLY FOR DOMESTIC AND LANDSCAPE IRRIGATION SYSTEMS	
UTILITIES ENGINEER	DATE	DRAWN BY	DRAWING NO.
David A. Winship, P.E.	6 - 10 - 04	JH - CPD	662

REGISTERED PROFESSIONAL ENGINEER 15860PE OREGON APRIL 1, 1991 JAMES E. BRINK

James E. Brink

EXPIRES: 12-31-07

AS-BUILT: CGOH & JEB 09-11-07 JEB

LANDSCAPE DETAILS

SW ROSE BIGGI (SW MILLIKAN-SW CRESCENT)

WASHINGTON COUNTY

FEDERAL HIGHWAY ADMINISTRATION		PROJECT NUMBER	SHEET NO.
REGION 1	OREGON DIVISION	OREGON	20

MAP RECORD | AB #18141_1810
Project: CIP 3314 | QS: 3516
Date: 09/11/2007

Rose Biggi (Millikan-Crescent) | Street Imp.

Y:\Sdsk\3314-Henry-North\CONST-DETAILS.dwg 05/23/2006 9:03:49 AM PDT

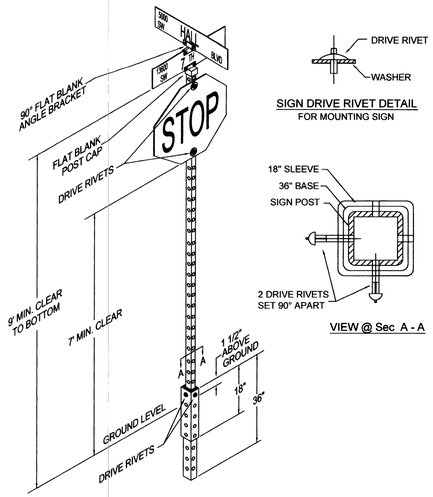

NOTES:

1. Sign post shall be inserted a minimum of 12-inches into the 36-inch base.
2. See Chapter 4 of the *Engineering Design Manual* for the material specifications.

City Of Beaverton	ENGINEERING DEPARTMENT		TYPICAL SIGN ASSEMBLY	
	TRAFFIC ENGINEER Randall R. Wooley	DATE 6 - 10 - 04	DRAWN BY JR - TD	DRAWING NO. 400

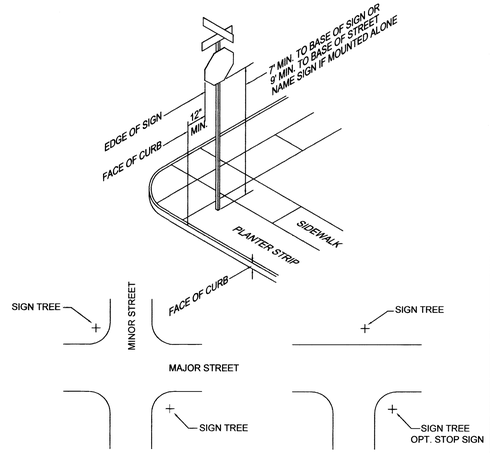

NOTES:

1. Sign locations shall be according to the *MUTCD* and as modified herein.
2. Signs where the sidewalk is curb tight shall be located 6-inches outside the sidewalk to a maximum distance of 7 feet from the face of curb.

City Of Beaverton	ENGINEERING DEPARTMENT		TYPICAL SIGN LOCATIONS	
	TRAFFIC ENGINEER Randall R. Wooley	DATE 6 - 10 - 04	DRAWN BY LA - CIP	DRAWING NO. 405

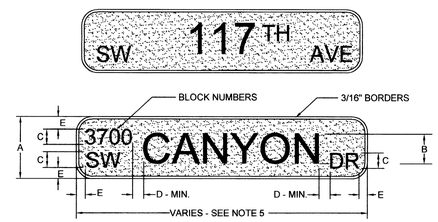

CRITICAL DIMENSIONS				
A	B	C	D	E
6"	4"	2"	1 ½"	1 1/16"

NOTES:

1. On all streets with posted speeds of 25 mph or less, new street name letters shall be 4-inches tall.
2. Letter styles from the *Standard Alphabets for Highway Signs Manual* shall be as follows:
   a. For the name of street use 4-inch series 'C'. Series 'B' is allowable for long names.
   b. For numbered streets use 4-inch series 'D' for the number and 2-inch series 'C' for the suffix.
   c. For prefixes, suffixes and block numbers use 2-inch series 'C'.
3. All signs shall include block numbers, as assigned by the *City*. Number streets shall include block numbers only when they differ from the actual street number.
4. Flat blanks for 4-inch street name signs shall be 0.100-inch gauge with 6063 T6 alodine coated aluminum substrate.
5. The minimum length shall be 24-inches and the maximum length shall be 36-inches, in 6-inch increments, with 1/2-inch radius corners.
6. Both sides of street name signs shall be green *3M Scotchlite* brand High Intensity Reflective sheeting.
7. All letters, numbers and borders shall be silver *3M Scotchlite* brand High Intensity Reflective sheeting.
8. Mounting hardware shall be 5/8-inch #850F-long square caps for 2-inch square posts and #850F-long 90° crosspieces. For post mounting assembly see *Beaverton Standard Dwg* 400.

ATTENTION! THIS DRAWING REPLACES DRAWING NO. 410, DATED 6-10-04

City Of Beaverton	ENGINEERING DEPARTMENT		STREET NAME SIGN - 4 INCH	
	TRAFFIC ENGINEER Randall R. Wooley	DATE 1 - 14 - 05	DRAWN BY JR - TD	DRAWING NO. 410

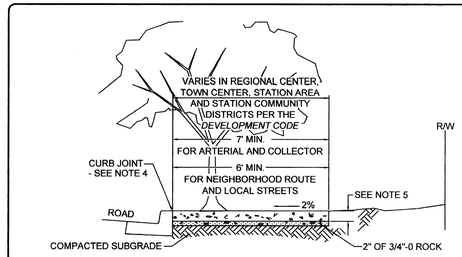

CURB TIGHT SIDEWALK
WHEN PREAPPROVED

NOTES:

1. Concrete shall have a minimum compressive strength of 4,000 psi at 28 days, slump range of 1 ½ to 3-inches.
2. Sidewalk panels shall be square with their length equal to the sidewalk's width, except that sidewalks in the Regional Center, Town Center, Station Area and Station Community districts may be wider than 6 feet, in which cases their panels may be 4 to 6 feet square, but all of equal size.
3. Expansion joints to be placed at sides of driveway approaches, utility vaults, sidewalk ramps and/or at points of tangency in curb as shown on the standard drawings for sidewalk ramps and at spacing not to exceed 45 feet.
4. For sidewalks adjacent to the curb and poured at the same time as the curb, the joint between them shall be troweled with a minimum 1/2-inch radius.
5. Sidewalk shall have a minimum thickness of 4-inches, except that sidewalk that is intended as a portion of a driveway shall have a minimum thickness of 6-inches. See *Beaverton Standard Dwgs* 210 & 211.
6. Where vehicular access across sidewalk is required by City, a 40-foot long section of sidewalk shall be provided in the access area, shall be 6-inches thick and shall be reinforced with 6"x6"x10 ga. steel mesh. Location of 40 foot long section to be as directed by City Engineer.
7. Finish with broom and edge all joints.
8. Street trees, treewells and grates are required except where specifically modified or waived in writing by the City Engineer.
9. For sidewalk widths around grated treewells, and tree grate requirements, see *Beaverton Standard Dwg* 241.
10. For sidewalk repairs, replacements and installations in existing developments, match existing width of sidewalks, and sidewalk panels' widths and lengths.

ATTENTION! THIS DRAWING REPLACES DRAWING NO. 216, DATED 6-10-04

City Of Beaverton	ENGINEERING DEPARTMENT		CURB TIGHT SIDEWALK (WHEN PREAPPROVED)	
	TRAFFIC ENGINEER Randall R. Wooley	DATE 3 - 22 - 05	DRAWN BY JR - CPD	DRAWING NO. 216

City Of Beaverton	ENGINEERING DEPARTMENT		FUTURE STREET EXTENSION SIGN	
	TRAFFIC ENGINEER Randall R. Wooley	DATE 6 - 10 - 04	DRAWN BY JR - CPD	DRAWING NO. 415

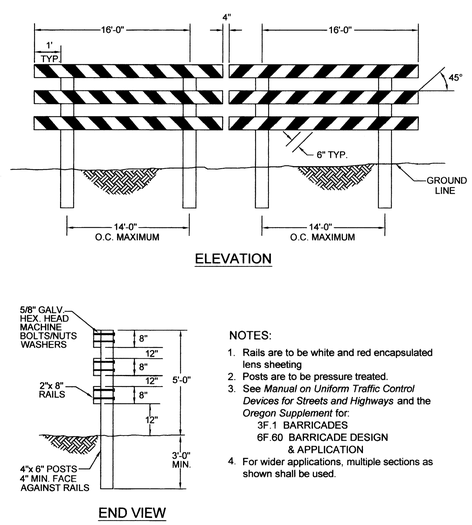

NOTES:

1. Rails are to be white and red encapsulated lens sheeting
2. Posts are to be pressure treated.
3. See *Manual on Uniform Traffic Control Devices for Streets and Highways* and the *Oregon Supplement* for:
   3F.1 BARRICADES
   6F.60 BARRICADE DESIGN & APPLICATION
4. For wider applications, multiple sections as shown shall be used.

City Of Beaverton	ENGINEERING DEPARTMENT		STREET BARRICADE - TYPE III	
	TRAFFIC ENGINEER Randall R. Wooley	DATE 6 - 10 - 04	DRAWN BY JR - TD	DRAWING NO. 435

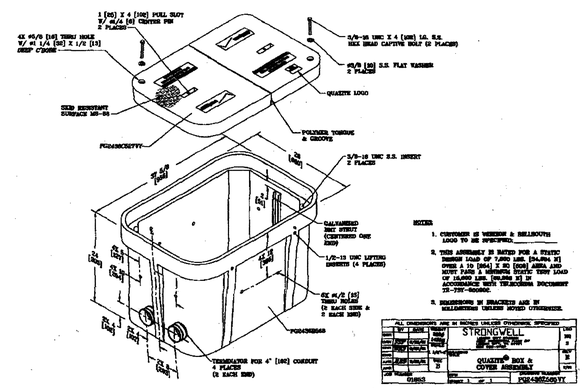

HANDHOLE – 24x36x24
10K RATING – BOX & 2 Pc SPLIT COVER

SSI# (VERIZON EAST) – 700251273
ITEM ID (VERIZON WEST) – 911690

REPLACEMENT COVER – 24x36x24
10K RATING – 2 Pc SPLIT COVER

SSI# (VERIZON EAST) – 700253050
ITEM ID (VERIZON WEST) – 924072

REGISTERED PROFESSIONAL ENGINEER 15860PE
James E. Brink
OREGON
APRIL 1, 1991
JAMES E. BRINK
EXPIRES: 12-31-07

AS-BUILT: CGOH
JEB 09-11-07 JEB

CONSTRUCTION DETAILS

SW ROSE BIGGI (SW MILLIKAN-SW CRESCENT)
WASHINGTON COUNTY

FEDERAL HIGHWAY ADMINISTRATION		PROJECT NUMBER	SHEET NO.
REGION 1	OREGON DIVISION	OREGON	21

MAP RECORD | AB #18142_1810
Project: OD 3314 | QS: 3516
Date: 09/11/2007

Rose Biggi (Millikan-Crescent) | Street Imp.

Y:\Sdsk\3314-Henry-North\CONST-DETAILS.dwg 05/23/2006 9:03:49 AM PDT

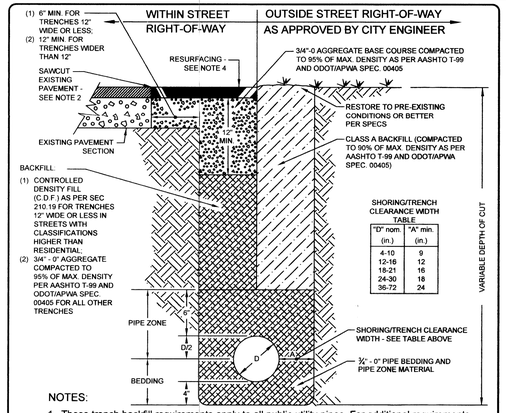

NOTES:

1. These trench backfill requirements apply to all public utility pipes. For additional requirements, see CWS Design and Construction Standards and City's *Engineering Design Manual* sections 210.18 & 210.19.
2. Sawcut existing A.C. pavement full depth. Sawcut existing P.C.C. pavement according to *Beaverton Standard Dwgs* 309 & 310.
3. For P.C.C. pavement required width of cut see *Beaverton Standard Dwgs* 309 & 310.
4. Match existing pavement material(s). Thickness shall be as follows:
   a. For existing Portland Cement Concrete (P.C.C.): existing pavement thickness plus 2-inches, but not less than 8-inches. On Arterial and Collector streets, concrete patching material shall be high early strength class 5,000 psi P.C.C. approved by City Engineer.
   b. For existing Asphalt Concrete (A.C.): resurface to a minimum of 3½-inches of class 'C' A.C. or existing A.C. thickness plus 2-inches, whichever is greater, but do not exceed 6-inches. Compact A.C. in 2-inch maximum lifts to 91% of maximum density (*Rice*).
5. All cut edges of A.C. shall be sand sealed with CRS-1 or CRS-2 emulsified asphalt or equal.
6. For conduit trench requirements see *Beaverton Standard Dwg* 301.

City Of Beaverton

ENGINEERING DEPARTMENT		PIPE TRENCH BACKFILL AND SURFACE RESTORATION	
CITY ENGINEER	DATE	DRAWN BY	DRAWING NO.
Terry Waldele, P.E.	6 - 10 - 04	JR - CPD	300

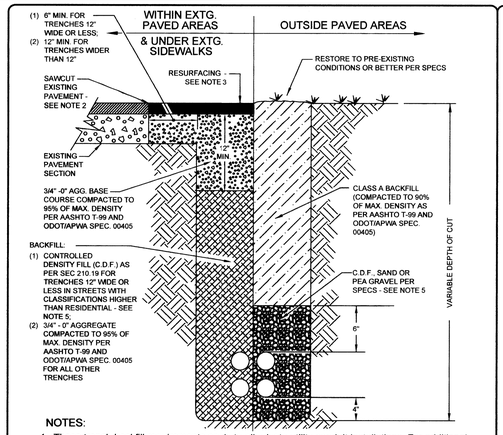

NOTES:

1. These trench backfill requirements apply to all private utility conduit installations. For additional requirements, see *Engineering Design Manual* sections 210.18 & 210.19.
2. Sawcut existing A.C. pavement full depth. Sawcut existing P.C.C. pavement according to *Beaverton Standard Dwgs* 309 & 310.
3. Match existing pavement material(s). Thicknesses shall be as follows:
   a. For existing Portland Cement Concrete (P.C.C.): existing pavement thickness plus 2-inches, but not less than 8-inches. On Arterial and Collector streets, concrete patching material shall be high early strength class 5,000 psi P.C.C. concrete approved by City Engineer.
   b. For existing Asphalt Concrete (A.C.): resurface to a minimum of 3½-inches of Class 'C' A.C. or existing A.C. thickness plus 2-inches, whichever is greater, but do not exceed 6-inches. Compact A.C. in 2-inch maximum lifts to 91% of maximum density (*Rice*).
4. All cut edges of A.C. shall be sand sealed with CRS-1 or CRS-2 emulsified asphalt or equal.
5. The City does NOT allow Portland Cement Concrete to be placed around City-owned conduits.

City Of Beaverton

ENGINEERING DEPARTMENT		CONDUIT TRENCH BACKFILL AND SURFACE RESTORATION	
CITY ENGINEER	DATE	DRAWN BY	DRAWING NO.
Terry Waldele, P.E.	6 - 10 - 04	JR - CPD	301

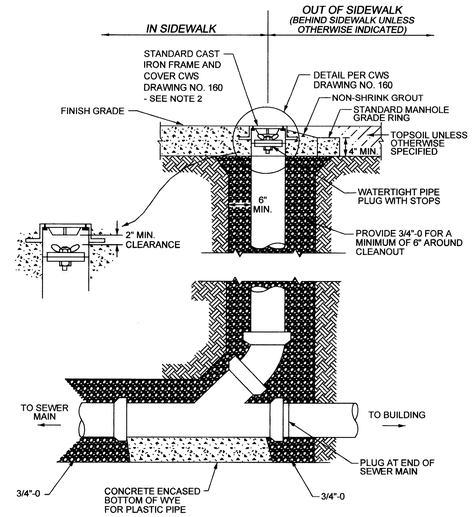

NOTES:

1. Concrete encase entire wye section and 45° bend if concrete pipe.
2. Cleanout in sidewalk to be centered in sidewalk width.

City Of Beaverton

ENGINEERING DEPARTMENT		STANDARD CLEANOUT IN EXISTING STREET	
CITY ENGINEER	DATE	DRAWN BY	DRAWING NO.
Terry Waldele, P.E.	6 - 10 - 04	JCH - CPD	302

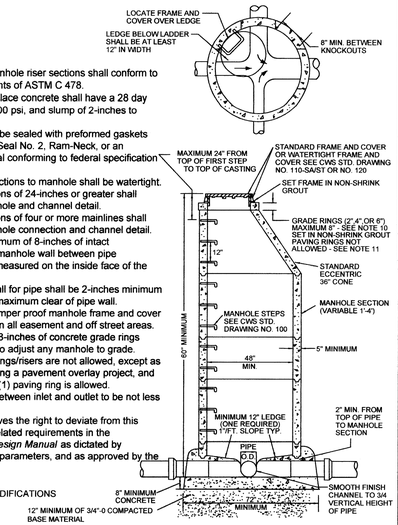

NOTES:

1. All precast manhole riser sections shall conform to the requirements of ASTM C 478.
2. All poured in place concrete shall have a 28 day strength of 3000 psi, and slump of 2-inches to 4-inches.
3. All joints shall be sealed with preformed gaskets such as Kent-Seal No. 2, Ram-Neck, or an approved equal conforming to federal specification SS-S00210.
4. All pipe connections to manhole shall be watertight.
5. *Pipe connections of 24-inches or greater shall require a manhole and channel detail.
6. Pipe connections of four or more mainlines shall require a manhole connection and channel detail.
7. Provide a minimum of 8-inches of intact (undisturbed) manhole wall between pipe breakouts as measured on the inside face of the manhole.
8. Breakout of wall for pipe shall be 2-inches minimum and 4-inches maximum clear of pipe wall.
9. Watertight / tamper proof manhole frame and cover shall be used in all easement and off street areas.
10. *No more than 8-inches of concrete grade rings shall be used to adjust any manhole to grade.
11. *Metal paving rings/risers are not allowed, except as necessary during a pavement overlay project, and then only one (1) paving ring is allowed.
12. *Minimum fall between inlet and outlet to be not less than 0.10 feet.
13. *The City reserves the right to deviate from this drawing and related requirements in the *Engineering Design Manual* as dictated by project design parameters, and as approved by the City Engineer.

* INDICATES MODIFICATIONS FROM CWS

STANDARD MANHOLE

CWS (USA) STANDARD DETAIL NO. 010
MODIFIED BY BEAVERTON ORDINANCE #4303

ATTENTION! THIS DRAWING REPLACES DRAWING NO. 304, DATED 11-15-04

City Of Beaverton

ENGINEERING DEPARTMENT		CWS (USA) STANDARD MANHOLE WITH C.O.B. MODIFICATIONS	
CITY ENGINEER	DATE	DRAWN BY	DRAWING NO.
Terry Waldele, P.E.	3 - 22 - 05	JR - CPD	304

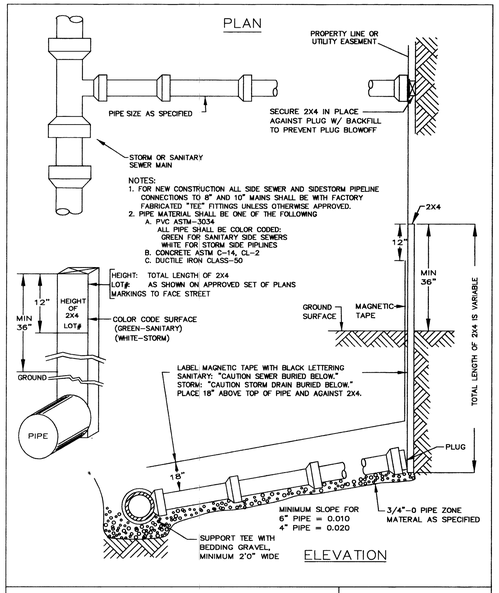

SIDE SEWER / SIDE STORM PIPELINE

DRAWING NO. 170 REVISED 02-03

CleanWater Services — Our commitment is clear.

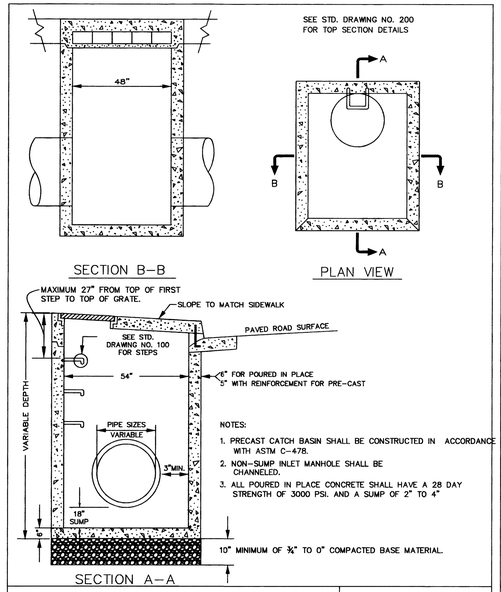

CURB INLET MANHOLE (CG-48 M.H.)

DRAWING NO. 195

CleanWater Services — Our commitment is clear.

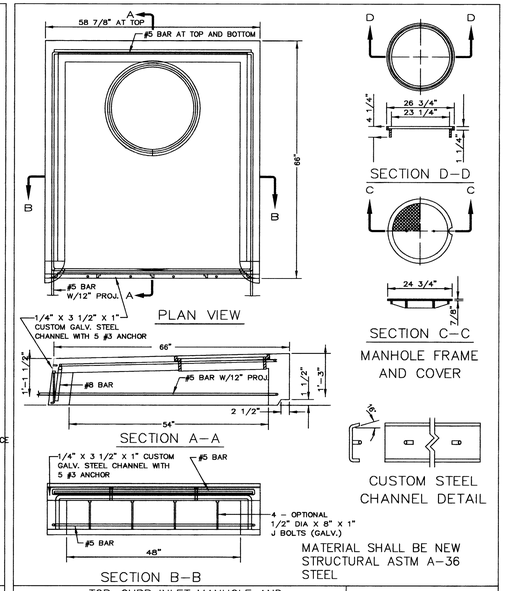

TOP-CURB INLET MANHOLE AND MODIFIED CURB INLET MANHOLE (CG-48 M.H. AND MOD. CG-48 M.H.)

DRAWING NO. 200

CleanWater Services — Our commitment is clear.

REGISTERED PROFESSIONAL ENGINEER 15860PE
James E. Brink
OREGON
APRIL 1, 1991
JAMES E. BRINK
EXPIRES: 12-31-07

AS-BUILT: CGOH & JEB 09-11-07

CONSTRUCTION DETAILS

SW ROSE BIGGI (SW MILLIKAN-SW CRESCENT)

WASHINGTON COUNTY

FEDERAL HIGHWAY ADMINISTRATION		PROJECT NUMBER	SHEET NO.
REGION 1	OREGON DIVISION	OREGON	22

MAP RECORD | AB #18143_1810
Project: CIP 3314 | QS: 3516
Date: 09/11/2007

Rose Biggi (Millikan-Crescent) | Street Imp.

Y:\Sdsk\3314-Henry-North\CONST-DETAILS.dwg 05/23/2006 9:03:49 AM PDT

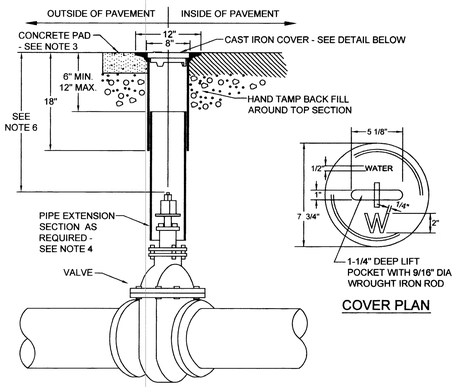

COVER PLAN

NOTES:

1. Valve type, size and ends as specified or shown on plans.
2. All valves that are 2-inch and larger shall have an operating nut.
3. When used in non-paved areas, provide an 18-inch square or 24-inch diameter round by 4-inch thick portland cement concrete pad.
4. For pipe extension section: use a 6-inch O.D. 12 gauge steel or 6-inch *AWWA* C900 PVC pipe in one-piece construction with no longitudinal cuts.
5. The cast iron cover is to have WATER or W cast with raised lettering into top surface.
6. When the valve nut is 54-inches or deeper below finished grade, provide valve operator extension per *Beaverton Standard Dwg* 620.
7. For 18-inches of valve box, flanged upper section of valve box and cover, use *Olympic Foundry* VB 910.

ATTENTION! THIS DRAWING REPLACES DRAWING NO. 615, DATED 6-10-04

City Of Beaverton

ENGINEERING DEPARTMENT		WATER VALVE BOX AND COVER	
UTILITIES ENGINEER David A. Winship, P.E.	DATE 10 - 25 - 04	DRAWN BY JR - CPD	DRAWING NO. 615

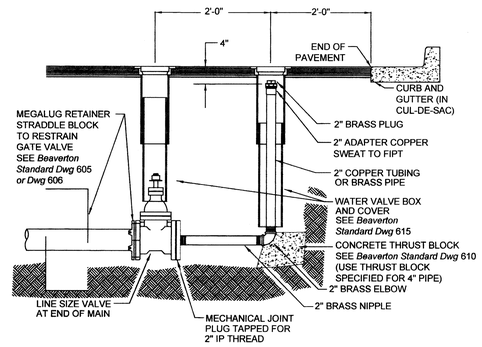

NOTES:

1. This blowoff is to be used at the ends of cul-de-sacs and at the end of water lines that may be extended in the future.
2. Blowoff size must be in accordance with *AWWA* flushing flow rates, but not less than 2-inches for 8-inch lines and smaller with 4-inches being the next approved size. (For blowoffs 4-inches and larger, see *Beaverton Standard Dwg* 631.)
3. Blowoff is not to be located in gutter or ditch.
4. The 2-inch fittings shall be brass.
5. Use copper or brass for all piping.
6. For temporary blowoff installations, see *Beaverton Standard Dwg* 633.

City Of Beaverton

ENGINEERING DEPARTMENT		STANDARD 2" BLOWOFF	
UTILITIES ENGINEER David A. Winship, P.E.	DATE 6 - 10 - 04	DRAWN BY JR - CPD	DRAWING NO. 630

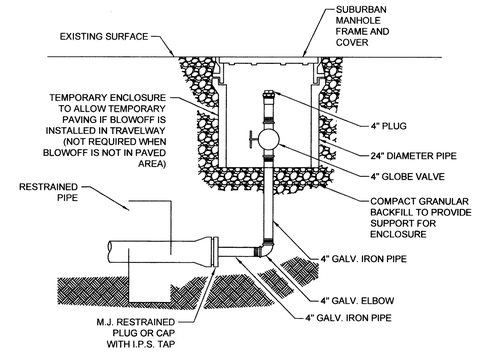

NOTES:

1. This blowoff is to be used to facilitate removal of debris and sediment on City-financed (CIP) water line construction only unless expressly approved by the City Engineer for use on a private development project.
2. Blowoff size must be in accordance with *AWWA* flushing flow rates, but not less than 2-inches with 4-inches being the next approved size.
3. Contractor shall design blowoffs larger than 2-inch and shall submit design to Engineer for approval. Contractor shall include temporary enclosure in his/her design per this drawing when blowoff is in travelway.

City Of Beaverton

ENGINEERING DEPARTMENT		TEMPORARY BLOWOFF FOR CONSTRUCTION PURPOSES (ON CITY C.I.P. PROJECTS ONLY)	
UTILITIES ENGINEER David A. Winship, P.E.	DATE 6 - 10 - 04	DRAWN BY JCH - CPD	DRAWING NO. 633

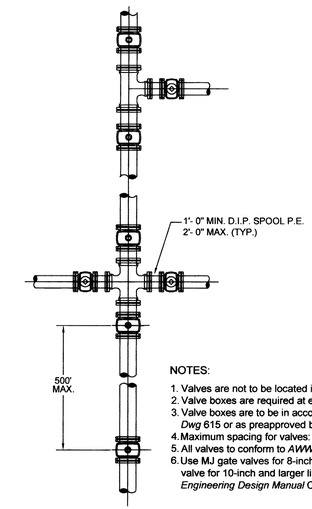

NOTES:

1. Valves are not to be located in curb and gutter area.
2. Valve boxes are required at each valve location.
3. Valve boxes are to be in accordance with *Beaverton Standard Dwg* 615 or as preapproved by the Utilities Engineer.
4. Maximum spacing for valves: 500 feet.
5. All valves to conform to *AWWA Standards*.
6. Use MJ gate valves for 8-inch and smaller lines, MJ butterfly valve for 10-inch and larger lines, or as specified by the *Engineering Design Manual* Chapter 6.

City Of Beaverton

ENGINEERING DEPARTMENT		TYPICAL MINIMUM WATER VALVE LOCATION	
UTILITIES ENGINEER David A. Winship, P.E.	DATE 6 - 10 - 04	DRAWN BY CDH - WD	DRAWING NO. 600

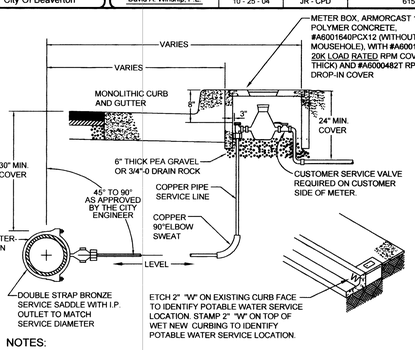

NOTES:

1. Bronze strainer to be used for 2-inch turbo meters.
2. Water service and meter to be installed by developer.
3. Top of meter box to be set flush with sidewalk or top of curb.
4. Corporation and curb stops to be Mueller 300 ball valves, 300 psi rated, with Mueller 110 compression joints and padlock wings, Ford Meter Box Co. Ballcorp 300 psi rated ball valve with "Quick Joint" connections and padlock wings, or identical equal. Corporation stop to be installed with key sideways in open position.
5. Copper pipe to be American or Canadian made type K.
6. Tapped couplings shall not be permitted. Service saddle to be installed no less than 18-inch from pipe joint, fitting, coupling or valve.
7. Wherever possible, service line to extend perpendicular from the water main to the meter stop.
8. All taps shall be made with machine guide or pilot tap.
9. All splices of copper tubing shall be silver solder connections.
10. All sweat joints shall be silver solder.
11. A 1-inch bypass line with locking curb stop may be required for continuous service installations.
12. All meter boxes located in driveways and sidewalks shall have traffic covers.
13. On compression connections, cut the pipe end straight, chamfer and clean prior to inserting into the fitting; tighten the compression nut until it makes metal-to-metal contact with the machine shoulder of the stop or fitting.

ATTENTION! THIS DRAWING REPLACES DRAWING NO. 641, DATED 11-15-05

City Of Beaverton

ENGINEERING DEPARTMENT		1-1/2" OR 2" COPPER SERVICE INSTALLATION	
UTILITIES ENGINEER David A. Winship, P.E.	DATE 3 - 22 - 05	DRAWN BY CDH - WD	DRAWING NO. 641

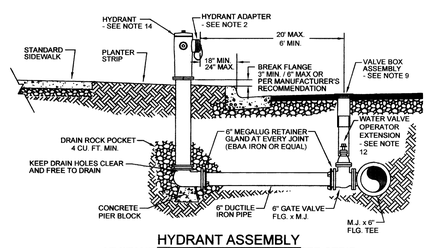

HYDRANT ASSEMBLY
AT STANDARD SIDEWALK WITH PLANTER STRIP

NOTES:

1. Hydrants are to have two 2½-inch and one 4½-inch ports.
2. Install a Storz HPHA50-45NH Permanent Hydrant Adapter on the 4½-inch port.
3. The minimum main - to - hydrant pipe size is 6-inches.
4. Hydrants to be: Mueller (Super Centurion 200), Waterous (Pacer WB67-250), Clow (Medallion F-2545), Kennedy (Guardian K-81D) or M&H (Regent style 129) with the following specifications:
   a. 5½-inch main valve (barrel)
   b. Oil reservoir
   c. Bronze actuating nut
   d. Bronze seat ring
   e. Weather shield cap
   f. Safety sleeve coupling
   g. Threaded nozzles with "O"-rings
   h. National standard threads
5. Hydrants are to be painted using R-1317 Safety Yellow paint or an alternate approved by the *TVF&R* Fire Marshall.
6. Safety chains are to be removed.
7. Hydrants are to be installed plumb.
8. Protective post is to be provided and installed, per *UFC Standards*, if hydrant is subject to vehicular damage.
9. Valve box assembly is to be in accordance *Beaverton Standard Dwg* 615 or as approved by the City Engineer.
10. No obstructions are allowed within 3 feet of Hydrant.
11. See *Beaverton Standard Dwg* 215 for sidewalk standards.
12. Add water valve operator extension when required. See *Beaverton Standard Dwg* 620.
13. Pipe bends are not allowed without permission of the City Engineer.
14. Hydrants may be located at varying distances from curb or in sidewalk only with prior approval of the City Engineer. If hydrant is located in sidewalk, sidewalk's clear width shall meet ADA clearance width requirements.

ATTENTION! THIS DRAWING REPLACES DRAWING NO. 625, DATED 5-10-04

City Of Beaverton

ENGINEERING DEPARTMENT		STANDARD FIRE HYDRANT ASSEMBLY	
UTILITIES ENGINEER David A. Winship, P.E.	DATE 5 - 3 - 05	DRAWN BY JR - CPD	DRAWING NO. 625

REGISTERED PROFESSIONAL ENGINEER 15860PE
James E. Brink
OREGON
APRIL 1, 1991
JAMES E. BRINK
EXPIRES: 12-31-07

AS-BUILT: CCOH & JED 09-11-07

CONSTRUCTION DETAILS

SW ROSE BIGGI (SW MILLIKAN-SW CRESCENT)

WASHINGTON COUNTY

FEDERAL HIGHWAY ADMINISTRATION		PROJECT NUMBER	SHEET NO.
REGION 1	OREGON DIVISION	OREGON	23

MAP RECORD | AB #18144_18
Project: CIP 3314 | QS: 35
Date: 09/11/2007

Rose Biggi (Millikan-Crescent) | Street

Y:\Sdsk\3314-Henry-North\CONST-DETAILS.dwg 05/23/2006 9:03:49 AM PDT

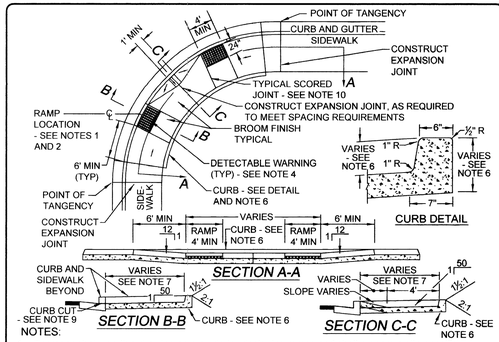

NOTES:

1. Engineer shall use this drawing as a guide for designing ramps and shall prepare a site-specific drawing for each ramp.
2. Engineer shall verify applicability of this drawing to specific locations within the project before using it as a design guide and shall locate each ramp relative to crosswalk or stop line.
3. Sidewalk ramp grades shall meet *ADA Standards*.
4. Detectable warning shall be truncated dome type, 24 inches long in direction of travel and full width of ramp, with domes aligned on a square grid with its gridlines parallel and perpendicular to the centerline of the ramp, "Armor-Tile, Cast-In-Place Tiles".
5. Curb inlet or catch basin shall not be allowed in front of textured ramp.
6. Construct curb with varying exposure tapered longitudinally so that the top of the curb matches the normal projected back of sidewalk as shown in sections B-B and C-C, where the adjacent ground is improved and slopes away from sidewalk, and where the back edge of new sidewalk at ramp is less than 0.6 feet above the gutter flowline.
7. For sidewalk widths and panel dimensions, see *Beaverton Standard Dwg* 216.
8. Concrete to have compressive strength of 4,000 psi at 28 days.
9. Bevel the curb cut from gutter to back of curb at 2% (1:50).
10. Score at grade changes, surface texture changes and at other points shown. Edges shall be shined.
11. Engineer shall accept full responsibility for correcting all unacceptable ramp construction resulting from applying this drawing "as is" and not providing a site-specific drawing for each ramp.
12. A single ramp may be used at "T" intersections at the locations shown in the diagram in section 210.10 of the Engineering Design Manual.

City Of Beaverton

ENGINEERING DEPARTMENT		CURB TIGHT SIDEWALK RAMPS (WHEN PREAPPROVED)	
CITY ENGINEER Terry Waldele, P.E.	DATE 6 - 10 - 04	DRAWN BY JR - TD	DRAWING NO. 221

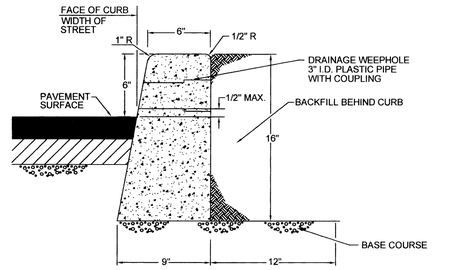

NOTES:

1. For use ONLY when replacing similar curb. This curb is not intended for new construction unless preapproved by City Engineer.
2. Concrete to have compressive strength of 4,000 psi at 28 days.
3. Expansion joints to be provided at each:
   a. Point of tangency.
   b. Cold joint.
   c. Side of inlet structures.
   d. Side of driveways.
4. Expansion joint material to be pre-molded, asphalt impregnated, non-extruding, with a thickness of 1/2-inch.
5. Contraction joints shall have:
   a. Spacing of not more than 15 feet.
   b. Depth of Joint of at least 1½-inches.
6. Base rock 2"-0 or 3/4"-0, 95% (*AASHTO* T-180) compaction. Base rock shall be to subgrade of street structure or 4-inches, which ever is greater, and shall extend 12-inches behind the curb.
7. Drainage weephole shall be:
   a. 3-inch I.D. plastic pipe with coupling and beveled outlet end to match face of curb.
   b. Centered with contraction joints.

City Of Beaverton

ENGINEERING DEPARTMENT		TYPE 'A' REPLACEMENT CURB	
CITY ENGINEER Terry Waldele, P.E.	DATE 6 - 10 - 04	DRAWN BY IS - TSD	DRAWING NO. 203

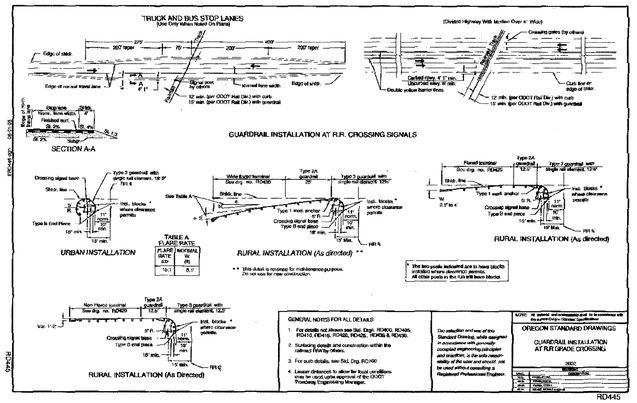

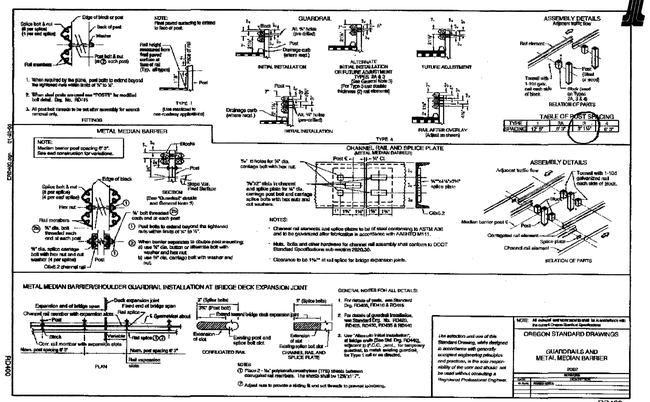

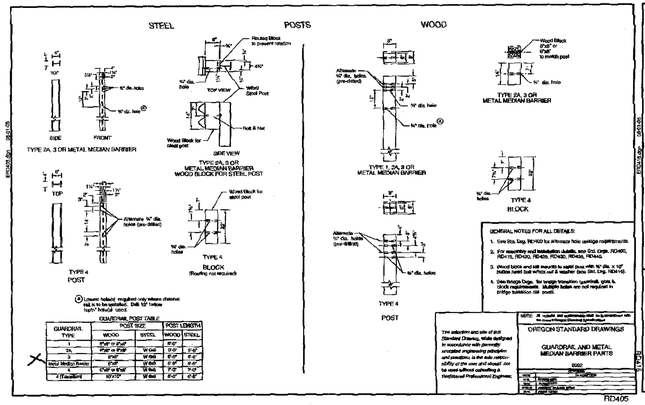

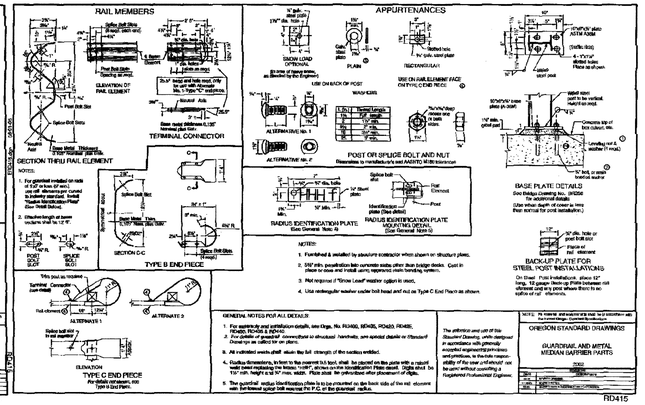

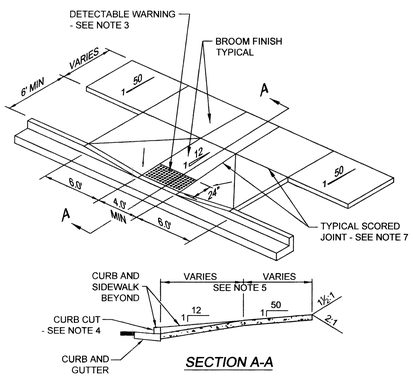

NOTES :

1. Engineer shall use this drawing as a guide for designing ramps and shall prepare a site-specific drawing for each ramp.
2. Engineer shall verify applicability of this drawing to specific locations within the project before using it as a design guide and shall locate each ramp relative to crosswalk or stop line.
3. Detectable warning shall be truncated dome type, 24 inches long in direction of travel and full width of ramp, with domes aligned on a square grid with its gridlines parallel and perpendicular to the centerline of the ramp, "Armor-Tile, Cast-In-Place Tiles".
4. Bevel the curb cut from gutter to back of curb at 8.33% (1:12).
5. For sidewalk widths, planter strip widths and sidewalk panel dimensions, see *Beaverton Standard Dwg* 215.
6. Concrete to have compressive strength of 4,000 psi at 28 days.
7. Score at grade changes, surface texture changes and at other points shown. Edges shall be shined.
8. For planter strip less than 6 foot min. width, see *Beaverton Standard Dwg* 235.
9. Engineer shall accept full responsibility for correcting all unacceptable ramp construction resulting from applying this drawing "as is" and not providing a site-specific drawing for each ramp.

City Of Beaverton

ENGINEERING DEPARTMENT		MIDBLOCK SIDEWALK RAMP WITH PLANTER STRIP	
CITY ENGINEER Terry Waldele, P.E.	DATE 6 - 10 - 04	DRAWN BY JR - TD	DRAWING NO. 225

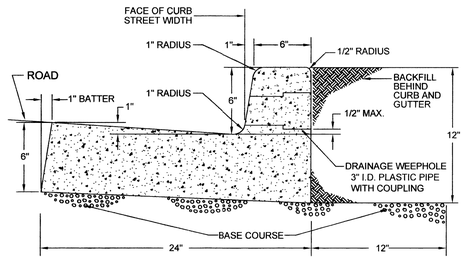

NOTES:

1. For use along medians, gutters may be reduced when preapproved by City Engineer.
2. Concrete to have compressive strength of 4,000 psi at 28 days.
3. Expansion joints to be provided at each:
   a. Point of tangency.
   b. Cold joint.
   c. Side of inlet structures.
   d. Side of driveways.
4. Expansion joint material to be pre-molded, asphalt impregnated, non-extruding, with a thickness of 1/2-inch.
5. Contraction Joints shall have:
   a. Spacing of not more than 15 feet.
   b. Depth of joint of at least 1½-inches.
6. Base rock 2"-0 or 3/4"-0, 95% (*AASHTO* T-180) compaction. Base rock shall be to subgrade of street structure or 4-inches, whichever is greater, and shall extend 12-inches behind the curb.
7. Drainage weephole shall be:
   a. 3-inch diameter I.D. plastic pipe with coupling and beveled outlet end to match face of curb.
   b. Centered with contraction joints.
   c. Core-drilled through existing curbs for drainage access.

City Of Beaverton

ENGINEERING DEPARTMENT		STANDARD MONOLITHIC CURB AND GUTTER	
CITY ENGINEER Terry Waldele, P.E.	DATE 6 - 10 - 04	DRAWN BY IS - TSD	DRAWING NO. 200

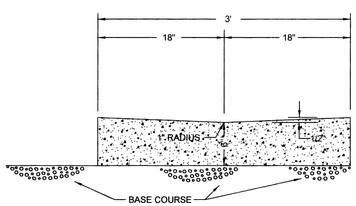

NOTES:

1. Concrete to have compressive strength of 4,000 psi at 28 days.
2. Expansion joints to be provided at each:
   a. Point of tangency.
   b. Cold joint.
   c. Side of inlet structures.
   d. Side of driveways.
3. Expansion joint material to be pre-molded, asphalt impregnated, non-extruding, with a thickness of 1/2-inch.
4. Contraction Joints shall have:
   a. Spacing of not more than 15 feet.
   b. Depth of joint of at least 1½-inches.
5. Base Rock: 4" of 3/4"-0, 95% (*AASHTO* T-180) compaction.

MOUNTABLE CURB AND GUTTER

REGISTERED PROFESSIONAL ENGINEER 15860PE OREGON APRIL 1, 1991 JAMES E. BRINK

EXPIRES: 12-31-07

AS-BUILT: CGOM
JEB 09-11-07

CONSTRUCTION DETAILS

SW ROSE BIGGI (SW MILLIKAN-SW CRESCENT)

WASHINGTON COUNTY

FEDERAL HIGHWAY ADMINISTRATION		PROJECT NUMBER	SHEET NO.
REGION 1	OREGON DIVISION	OREGON	24

MAP RECORD | AB #18145_181
Project: CIP 3314 | QS: 351
Date: 09/11/2007
Rose Biggi (Millikan-Crescent) | Street Im

Y:\Sdsk\3314-Henry-North\CONST-DETAILS.dwg 05/23/2006 9:03:49 AM PDT

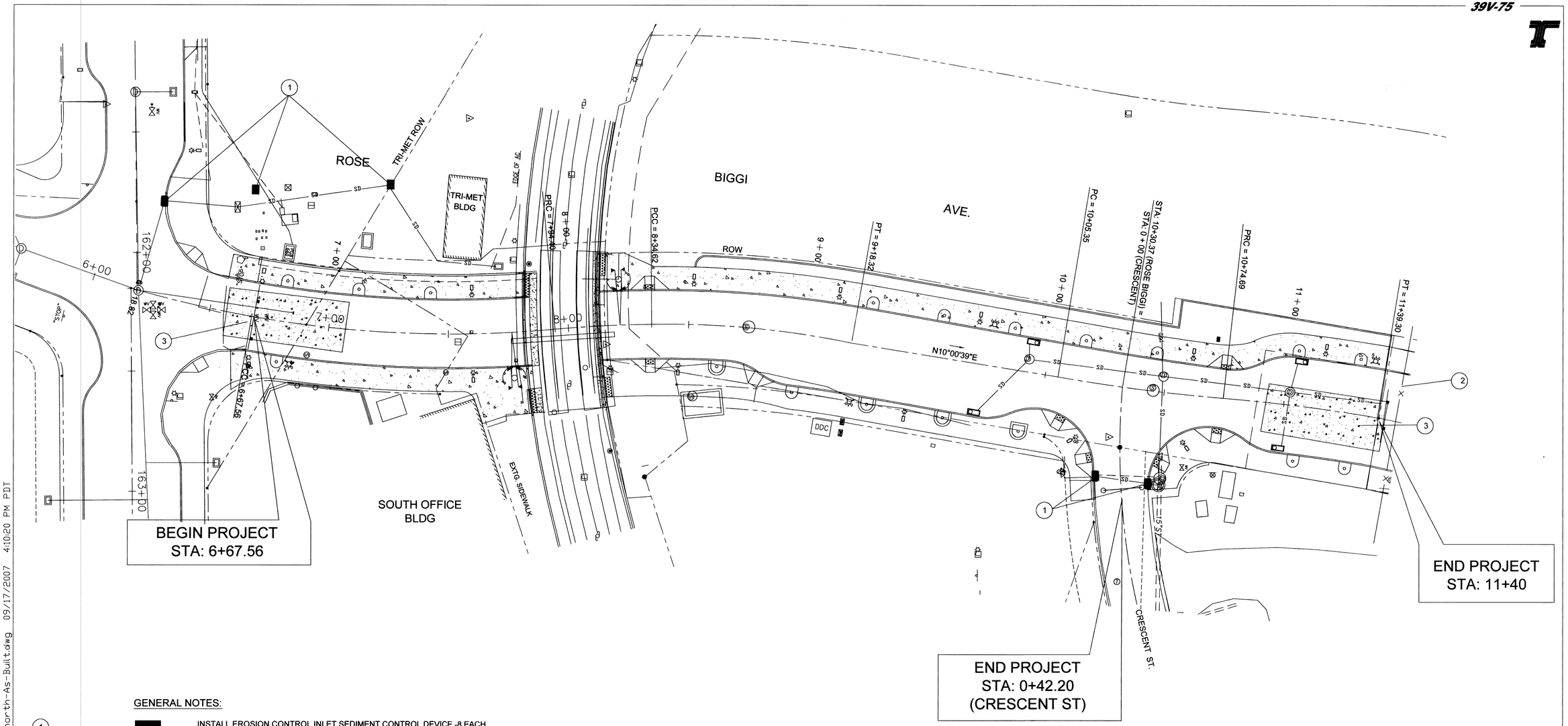

Y:\Sdsk\3314-Henry-North\AS-BUILT\3314-henry-north-As-Built.dwg 09/17/2007 4:10:20 PM PDT

GENERAL NOTES:

1. INSTALL EROSION CONTROL INLET SEDIMENT CONTROL DEVICE -8 EACH (SEE DETAIL SHT. 26).
2. MAINTAIN EXTG. EROSION CONTROL SILT FENCE, APPROX. 92 LF
3. INSTALL GRAVEL CONSTRUCTION ENTRANCE, 2 EACH (SEE DETAIL SHT. 26).

0 20 40 80

AS-BUILT: CG01
& JEB 09-11-07
JEB

DRAFTED BY:	CG	DESIGNED BY:	JEB	REVIEWED BY:	TLW

REGISTERED PROFESSIONAL ENGINEER 15860PE OREGON APRIL 1, 1994 JAMES E. BRINK
EXPIRES: 12-31-07

SW ROSE BIGGI (SW MILLIKAN-SW CRESCENT)

WASHINGTON COUNTY

FEDERAL HIGHWAY ADMINISTRATION		PROJECT NUMBER	SHEET NO.
REGION 1	OREGON DIVISION	OREGON	25

MAP RECORD | AB #18146_1810
Project: CIP 3314 | QS: 3516
Date: 09/11/2007

Rose Biggi (Millikan-Crescent) | Street Imp.

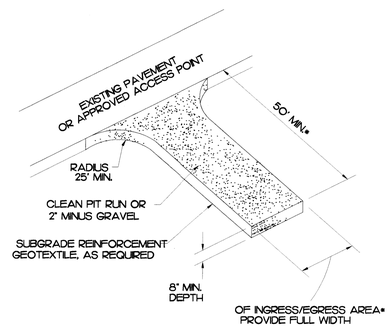

*20' MIN. FOR SINGLE FAMILY
AND DUPLEX RESIDENTIAL

GRAVEL CONSTRUCTION ENTRANCE

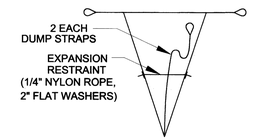

BAG DETAIL

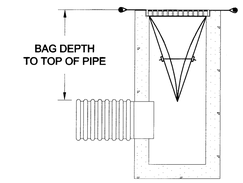

INSTALLATION DETAIL

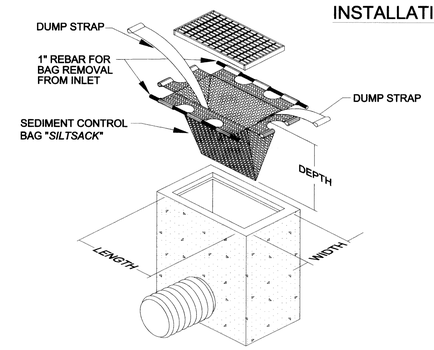

DETAIL OF INLET SEDIMENT CONTROL DEVICE

NOTE:

1. The dimension chart above is for standard catch basins and inlets only. The contractor is responsible for providing the correct size device for each inlet.
2. For non-*Clean Water Services Standard* catch basins and inlets, the contractor shall measure dimensions in the field and order the appropriate size(s).
3. The inlet sediment control device shall be of high flow design (200 gal / min / ft^2), as per the manufacturer's specifications.
4. The sediment control device shall be inspected daily by the contractor and maintained a minimum once per month or within the 48 hours following a storm event.
5. Substitution of a sheet of filter fabric placed over the opening of the inlet is not approved.

City Of Beaverton

ENGINEERING DEPARTMENT		INLET SEDIMENT CONTROL DEVICE	
CITY ENGINEER	DATE	DRAWN BY	DRAWING NO.
Terry Waldele, P.E.	6 - 10 - 04	JR - CPD	145

EROSION CONTROL DETAILS

REGISTERED PROFESSIONAL ENGINEER
E 13860PE
OREGON
APRIL 1, 199
JAMES E. BRINK
EXPIRES: 12-31-07

AS-BUILT: CGOA 09-11-07 JEB

DRAFTED BY:	CG	DESIGNED BY:	JEB	REVIEWED BY:	TLW

SW ROSE BIGGI
(SW MILLIKAN-SW CRESCENT)
WASHINGTON COUNTY

FEDERAL HIGHWAY ADMINISTRATION		PROJECT NUMBER	SHEET NO.
REGION 1	OREGON DIVISION	OREGON MAP RECORD | AB #18147_1810	26

Project: CIP 3314 | QS: 3516
Date: 09/11/2007

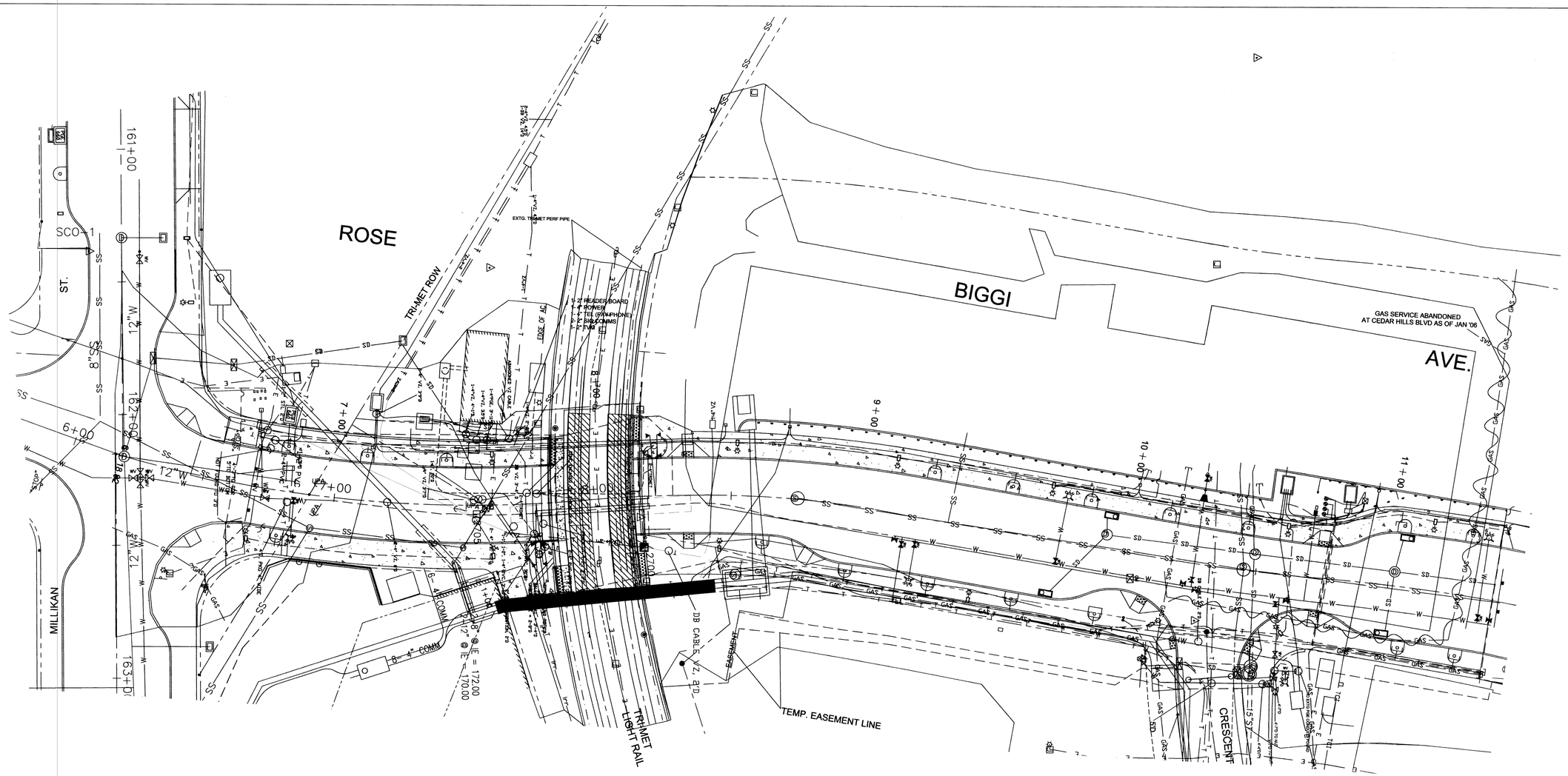

THE UTILITY INFORMATION ON THIS SHT WAS NOT UPDATED OR CHANGED BASED ON INFORMATION GATHERED DURING CONSTRUCTION.

AS-BUILT

THESE AS-BUILT PLANS WERE COMPILED FROM SURVEY DATA, DATA COLLECTED FROM OTHERS, AND OBSERVATION DURING CONSTRUCTION. IT IS SUGGESTED THAT THESE PLANS BE USED IN CONJUNCTION WITH FIELD VERIFICATION OF LOCATION AND ELEVATION OF IMPROVEMENTS IN QUESTION. THE CITY OF BEAVERTON ASSUMES NO RESPONSIBILITY, OR LIABILITY, FOR ANY ERRORS, OMISSIONS, OR USE OF THIS INFORMATION.

James E. Brink
SIGNATURE

9-11-2007
DATE

N

0 20 40 80

AS-BUILT: CGOH & JEB 09-11-07 JEB

REGISTERED PROFESSIONAL ENGINEER 15860PE OREGON APRIL 1, 1997 JAMES E. BRINK
James E. Brink
EXPIRES: 12-31-07

SW ROSE BIGGI (SW MILLIKAN-SW CRESCENT)

WASHINGTON COUNTY

FEDERAL HIGHWAY ADMINISTRATION		PROJECT NUMBER	SHEET NO.
REGION 1	OREGON DIVISION	OREGON	27

MAP RECORD | AB #18148_1810
Project: CP 3314 | QS: 3516
Date: 09/11/2007

DRAFTED BY:	CG	DESIGNED BY:	JEB	REVIEWED BY:	TLW

Y:\Sdsk\3314-Henry-North\AS-BUILT\3314-henry-north-As-Built.dwg 09/17/2007 4:10:20 PM PDT

PIPE DATA SHEET

Sheet Number	Note No. on Plans	Design Ht. of Cover (1) Feet	Pipe Circular or Elliptical, Size in Inches / Length in Feet: 6"	8"	10"	12"	15"	Storm Sewer	Sanitary Sewer	Watertight Joints	SS Lateral	PH	Rigid Pre-Cast Concrete Plain 3	Reinf. III	Special PVC 3034	Manholes: Depth, Top of Cover to Invert (Feet)	Diameter of Largest Pipe in Base (In.)	Precast Conc.	Curb Inlet Manhole, CG48	Inlets: Filtered G2 (Number Required)	G-2 (Existing)	Extension Left (Feet)	Extension Right (Feet)	Extg. Pipe Material (6)	Remarks
	D1	2.9			14			√		√		7.5	√		√					1					CB2, CONNECT TO SDMH2
	D2	6.45					45	√		√		7.5		√	√	6.45	15	√							SDMH 1, 48"
	D3	3.4			27			√		√		7.5	√		√						1				CONNECT TO EXTG. G2CB (CB1224)
	D4	N/A														7.32	15		√						SDMH 1263
	D7	5.4					31	√		√		7.5		√	√							31		PL	CONNECT TO SDMH 1
	D8	2.86			23			√		√		7.5	√		√					1					CB 1, CONNECT TO SDMH 2
5	D9	5.47				54		√		√		7.5		√	√	5.47	12	√							SDMH 2, 48"
	D10	6.25				57		√		√		7.5		√	√	6.25	12	√							SDMH 3, 48"
	D11	2.9			8			√		√		7.5	√		√					1					CB3, CONNECT TO SDMH3
	D12	2.76			32			√		√		7.5	√		√					1					CB4, CONNECT TO SDMH3
	D14	4.0				38																		PL	CONNECT TO SDMH 2
	S1	7.8		170.1					√	√		7.5	√		√	7.8	8	√							SSMH 1, 48"
	S2	N/A										7.5				8.8	8	√					25.4	PL	SSMH 2, 48"
	S3	8.8		25.4					√	√		7.5	√		√										CONNECT TO EXTG PIPE
	S6	6.2		97.4					√	√		7.5	√		√										CONNECT TO SSMH 2
	S7	8.0	33.3							√	√	7.5	√		√										SS LAT STA 9+32.75
	S8	10.6		36.5					√	√		7.5	√		√							36.5		PL	CONNECT TO SSMH 2
													√		√										

GENERAL NOTES:

1. A check (√) indicates column heading applies.
2. A new pipe culvert installation shall be of like material throughout.
3. Extension of existing metal culverts may be of unlike metal or corrugations. For connecting details, standard drg. 2091–B
4. Dimensions shown are nominal.
5. All pipes shall conform to the AASHTO specification applicable for the type of material and the diameter of the pipe involved.

FOOTNOTES:

(1) Design height of cover shall be measured to subgrade.
(2) Cross–sectional dimensions may vary with different materials. When galvanized iron or steel and aluminum are acceptable alternates use a seperate line for each type of material
(3) Cross–sectional shape of pipe normal to longitudinal axis, prior to loading.
A = Arch Type
R = Round
E = Elliptical (5% nominal elongation)
(4) Minimum allowable diameter for Class I nonreinforced concrete pipe is 15 inches.
(5) Abbreviations for protective coatings for metal pipe
A = Type A asphalt coated
C = Type C asphalt coated with paved invert
D = Type D asphalt coated and fully lined
AP = Asbestos protected
U = Uncoated
CIM = Chevron industrial membrane
Ep = Epoxy coated
(6) Abbreviations for existing pipe materials
Ab = Asbestos cement
Al = Corrugated aluminum
Co = Concrete
Pl = Plastic
St = Corrugated steel
X = Other material, see remarks column

Drg. Nos.

	Drg. No.	
△1	☐ 2050	Manholes–Cast–In–Place,Covers
△1	☐ 2050A	Manholes Precast
	☐ 2091	Slope Anchors
	☐ 2091A	Pipe Backfill/Comp., Mult. Inst. & Subsurf. Dr.
	☐ 2091B	Coupling Band
△1	☐ 2105	Conc. Inlets (G, CG Series, Curb Inlets & D Inlet)
	☐ 2105A	Conc. Inlets (Types M–E, M–O & B)
	☐ 2105B	Conc. Inlets (Type CG–3)
	☐ 2112	Sloped Ends, Metal
	☐ 2121	Sloped Ends, Conc./Subgrade Drain
	☐ 2123	Paved End Slope
	☐ 2132	Slotted Drains
	☐ 2137	Large Precast Manhole

△1 REVISED JULY 6, 2006

GAGE EQUIVALENCE TABLE

GAGE	GALV. IRON & STEEL (THICKNESS IN INCHES)	ALUMINUM (THICKNESS IN INCHES)
18	0.052	0.048
16	0.064	0.060
14	0.079	0.075
12	0.109	0.105
10	0.138	0.135
8	0.168	0.164

AS-BUILT: CGOH & JEB 09-11-07 JEB

DRAFTED BY: CG | DESIGNED BY: JEB | REVIEWED BY: TLW

REGISTERED PROFESSIONAL ENGINEER 15860PE OREGON APRIL 1, 1991 JAMES E. BRINK
EXPIRES: 12–31–07

PIPE DATA SHEET

SW ROSE BIGGI (SW MILLIKAN-SW CRESCENT)

WASHINGTON COUNTY

FEDERAL HIGHWAY ADMINISTRATION		PROJECT NUMBER	SHEET NO.
REGION 1	OREGON DIVISION	OREGON	28

Y:\Sdsk\3314–Henry–North\AS–BUILT\COVER–PIPE–DATA–EROSION–DET.dwg 09/20/2007 8:15:43 AM PDT

MAP RECORD | AB #18149_1810
Project: CIP 3314 | QS: 3516
Date: 09/11/2007